Annex C

China Intelligent-connected Car Assessment Programme (C-ICAP)

(Version 1.1)

Detailed Rules for Assessment of Smart cockpit

June 2023

Contents

1 Evaluation Method 3

1.1 Indicator System 3

1.2 Weight Assignment of Indicators 7

1.2.1 Weight Assignment of Primary Indicators 7

1.2.2 Weight Assignment of Secondary Indicators 7

1.2.3 Weight Assignment of Tertiary Indicators 7

1.2.4 Weight Assignment of Quaternary Indicators 8

1.2.5 Weight Assignment of Quinary Indicators 11

1.3 Score Calculation Methods 15

1.3.1 Calculation Method of Total Score 15

1.3.2 Score Calculation Method of Primary Indicator 15

1.3.3 Score Calculation Method of Secondary Indicator 15

1.3.4 Score Calculation Method of Tertiary Indicator 15

1.3.5 Score Calculation Method of Quaternary Indicators 16

1.3.6 Notes to Scores of Quinary Indicators 16

2 Test Methods 37

2.1 Scope of Application 37

2.2 Normative Reference 37

2.3 Definitions 37

2.4 General 43

2.5 Test Items 43

2.5.1 Intelligent Interaction 43

2.5.2 Intelligent Escort 65

2.5.3 Smart Service 75

Appendix 1: Description of Test Corpus for Voice Interaction 78

C-ICAP

These Evaluation Rules apply to the passenger vehicles equipped with smart cockpit (including but not limited to touch interaction, voice interaction, and other functions)

Smart Cockpit means a cockpit equipped with advanced software and hardware systems, which can provide human-computer interaction, safety reminders, Internet of vehicle and other services, so as to create a "convenient, safe and pleasant" smart space for driver and passengers.

1 Evaluation Method

1.1 Indicator System

The indicators under smart cockpit are set forth in Table 1-1.

Table 1-1 Indicator System of Smart Cockpit

	Primary Indicator	Secondary Indicator	Tertiary Indicator	Quaternary Indicator		Quinary Indicator
Smart cockpit	Intelligent interaction	Touch interaction	Touch screen effect	Display scenario		Pixel density, Luminance adjustment
				Click scenario	Turning on local functions	Click response time
					Turning on connected functions	Click response time
				Sliding scenario	Sliding local functions	Sliding fluency
			Convenience of operation	Continuous interaction scenario	A/C setting	Total time of sight off road, Max time of sight off road, Number of steps
					Radio tuning	
			Mobile interconnection	Bluetooth connection		Bluetooth reconnection success rate
				WiFi connection		Mobile WiFi connection
				Mobile screen projection		Mobile screen mirroring, Cross screen interconnection
		Voice interaction	Wakeup ability	Voice wakeup	Wakeup without noise	Wakeup success rate, Wakeup delay
					Wakeup with noise	Wakeup success rate
					Wakeup with noise and background sound	Wakeup success rate
					Wakeup free	Wakeup success rate
					Outside wakeup (score-deducting item)	Wakeup success rate

Table 1-1 Indicator System of Smart Cockpit (Continued)

	Primary Indicator	Secondary Indicator	Tertiary Indicator	Quaternary Indicator		Quinary Indicator
Smart cockpit	Intelligent interaction	Voice interaction	Wakeup ability	Button wakeup		Wakeup success rate
			Interaction ability	Driver's seat	Without noise - Basic corpus interaction	Interaction success rate, Interaction response delay
					With noise - Basic corpus interaction	Interaction success rate
					Without noise - Advanced corpus interactio	Interaction success rate
					Internet disconnected - Basic corpus interaction	Interaction success rate
				Passenger's seat	Without noise - Basic corpus interaction	Interaction success rate
		Wireless interaction	Application-based vehicle control ability	Vehicle state display	Vehicle location	Function check
					Doors and windows	Function check
					Remaining mileage	Function check
					Tyre pressure	Function check
				Primary vehicle control	Window control	Vehicle control success rate
					A/C control	Vehicle control success rate
				Advanced vehicle control	Intelligent vehicle search	Vehicle control success rate
			Intelligent unlocking ability	Keyless unlocking	Application-based remote unlocking	Unlocking success rate
					Passive keyless entry	Unlocking success rate
					Bluetooth key	Unlocking success rate
					NFC unlocking	Unlocking success rate
				Biometric recognition	Face recognition	Unlocking success rate

C-ICAP

Table1-1 Indicator System of Smart Cockpit (Continued)

	Primary Indicator	Secondary Indicator	Tertiary Indicator	Quaternary Indicator		Quinary Indicator
Smart cockpit	Intelligent escort	Intelligent vision expansion	Around view monitoring	Daytime reverse scenario		Activation time, Realistic zoom, Splicing quality, Observation angle
			Head up display	Night scenario		Displayed information luminance, Displayed information size, Displayed information ghosting, Imaging distance, Downward-view angle, Field of view, Display contents
		Vision anti-interference	Anti-glare	Central control screen anti-glare	Homepage interface	Forward vision area luminance, Left rearview mirror area luminance, Right rearview mirror area luminance, Central control screen vision area luminance，Artifact
					Navigation interface	
					Music interface	
				Ambient lamp anti-glare	Keep ambient lamp on+central control screen homepage interface (score-deducting item)	
					Keep ambient lamp on+central control screen navigation interface (score-deducting item)	
					Keep ambient lamp on+central control screen music interface (score-deducting item)	

C-ICAP

Table1-1 Indicator System of Smart Cockpit (Continued)

	Primary Indicator	Secondary Indicator	Tertiary Indicator	Quaternary Indicator		Quinary Indicator
Smart cockpit	Smart service	Welcoming scenario	Vehicle body accessory linkage	Automatic rearview mirror unfolding		Function check
			On-board computer IP steward	Physical or virtual on-board computer IP steward image		Function check
				Personalized sound		Function check
		Driving scenario	Intelligent seat	Temperature adjustment	Seat ventilation	Function check
					Seat heating	Function check
				Position adjustment	Position memory	Function check
					Distinctive mode	Function check
				Seat massage		Function check
			Intelligent A/C	Automatic ventilation		Function check
			Software ecology in on-board computer	Types of software applications		Function check
			Intelligent Ambient lamp	Ambient lamp adjustment		Function check
		Seeing off scenario	Intelligent locking after leaving	Automatic locking after leaving		Function check

C-ICAP

1.2 Weight Assignment of Indicators

1.2.1 Weight Assignment of Primary Indicators

There are 3 primary indicators under the smart cockpit: intelligent interaction, intelligent escort, and smart service. The weight of each primary indicator is shown in Table 1-2.

Table 1-2 Weights of Primary Indicators Contained in Smart Cockpit

	No.	Primary Indicator	Weight
Smart cockpit	1	Intelligent interaction	60%
	2	Intelligent escort	30%
	3	Smart service	10%

1.2.2 Weight Assignment of Secondary Indicators

The weight of each secondary indicator of smart cockpit is shown in Table 1-3.

Table 1-3 Weights of Secondary Indicators Contained in Smart Cockpit

Primary Indicator	No.	Secondary Indicator	Weight
Intelligent interaction	1	Touch interaction	40%
	2	Voice interaction	50%
	3	Wireless interaction	10%
Intelligent escort	1	Intelligent vision expansion	60%
	2	Vision anti-interference	40%
Smart service	1	Welcoming scenario	10%
	2	Driving scenario	80%
	3	Seeing off scenario	10%

1.2.3 Weight Assignment of Tertiary Indicators

The weight of each tertiary indicator of smart cockpit is shown in Table 1-4.

Table 1-4 Weights of Tertiary Indicators Contained in Smart Cockpit

Primary Indicator	Secondary Indicator	No.	Tertiary Indicator	Weight
Intelligent interaction	Touch interaction	1	Touch screen effect	65%
		2	Convenience of operation	30%
		3	Mobile interconnection	5%
	Voice interaction	1	Wakeup ability	30%
		2	Interaction ability	70%
	Wireless interaction	1	Application-based vehicle control ability	50%
		2	Intelligent unlocking ability	50%
Intelligent escort	Intelligent vision expansion	1	Around view monitoring	85%
		2	Head up display	15%
	Vision anti-interference	1	Anti-glare	100%

CICAP

Table1-4 Weights of Tertiary Indicators Contained in Smart Cockpit (Continued)

Primary Indicator	Secondary Indicator	No.	Tertiary Indicator	Weight
Smart service	Welcoming scenario	1	Vehicle body accessory linkage	60%
		2	On-board computer IP steward	40%
	Driving scenario	1	Intelligent seat	40%
		2	Intelligent A/C	30%
		3	Software ecology in on-board computer	25%
		4	Intelligent ambient lamp	5%
	Seeing off scenario	1	Intelligent locking after leaving	100%

1.2.4 Weight Assignment of Quaternary Indicators

The weight of each quaternary indicator of smart cockpit is shown in Table 1-5.

Table 1-5 Weights of Quaternary Indicators Contained in Smart Cockpit

	Primary Indicator	Secondary Indicator	Tertiary Indicator	No.	Quaternary Indicator		Weight
Smart cockpit	Intelligent interaction	Touch interaction	Touch screen effect	1	Display scenario		10%
				2	Click scenario	Turning on local functions (40%)	60%
				3		Turning on connected functions (60%)	
				4	Sliding scenario	Sliding local functions (100%)	30%
			Convenience of operation	1	Continuous interaction scenario	A/C setting (50%)	100%
				2		Radio tuning (50%)	
			Mobile interconnection	1	Bluetooth connection		30%
				2	WiFi connection		30%
				3	Mobile screen projection		40%
		Voice interaction	Wakeup ability	1	Voice wakeup	Wakeup without noise (35%)	80%
				2		Wakeup with noise (40%)	
				3		Wakeup with noise and background sound (20%)	
				4		Wakeup free (5%)	
				5		Outside wakeup (score-deducting item) (5%)	
				6	Button wakeup		20%

Table1-5 Weights of Quaternary Indicators Contained in Smart Cockpit (Continued)

	Primary Indicator	Secondary Indicator	Tertiary Indicator	No.	Quaternary Indicator		Weight
Smart cockpit	Intelligent interaction	Voice interaction	Interaction ability	1	Driver's seat	Without noise-basic corpus interaction (45%)	90%
				2		With noise-basic corpus interaction (45%)	
				3		Without noise-advanced corpus interaction (5%)	
				4		Internet disconnected-basic corpus interaction (5%)	
				5	Passenger's seat	Without noise-basic corpus interaction (100%)	10%
		Wireless interaction	Application-based vehicle control ability	1	Vehicle state display	Vehicle location (30%)	20%
				2		Doors and windows (30%)	
				3		Remaining mileage (30%)	
				4		Tyre pressure (10%)	
				5	Primary vehicle control	Window control (50%)	60%
				6		A/C control (50%)	
				7	Advanced vehicle control	Intelligent vehicle search (100%)	20%
			Intelligent unlocking ability	1	Keyless unlocking	Application-based remote unlocking (30%)	90%
				2		Passive keyless entry (30%)	
				3		Bluetooth key (20%)	
				4		NFC unlocking (20%)	
				5	Biometric recognition	Face recognition (100%)	10%
	Intelligent escort	Intelligent vision expansion	Around view monitoring	1	Daytime reverse scenario		100%
			Head up display	1	Night scenario		100%

CICAP

Table1-5 Weights of Quaternary Indicators Contained in Smart Cockpit (Continued)

	Primary Indicator	Secondary Indicator	Tertiary Indicator	No.	Quaternary Indicator		Weight
Smart cockpit	Intelligent escort	Vision anti-interference	Anti-glare	1	Central control screen anti-glare	Homepage interface (35%)	100%
				2		Navigation interface (35%)	
				3		Music interface (30%)	
				4	Ambient lamp anti-glare	Keep ambient lamp on+central control screen homepage interface (score-deducting item) (35%)	10%
				5		Keep ambient lamp on+central control screen navigation interface (score-deducting item) (35%)	
				6		Keep ambient lamp on+central control screen music interface (score-deducting item) (30%)	
	Smart service	Welcoming scenario	Vehicle body accessory linkage	1	Automatic rearview mirror unfolding		100%
			On-board computer IP steward	1	IP steward		50%
				2	Personalized sound		50%
		Driving scenario	Intelligent seat	1	Temperature adjustment	Seat ventilation (50%)	40%
				2		Seat heating (50%)	
				3	Position adjustment	Position memory (50%)	40%
				4		Distinctive mode (50%)	
				5	Seat massage		20%
			Intelligent A/C	1	Automatic ventilation		100%
			Software ecology in on-board computer	1	Types of software applications		100%
			Intelligent Ambient lamp	1	Ambient lamp adjusting		100%
		Seeing off scenario	Intelligent locking after leaving	1	Intelligent locking after leaving		100%

C-ICAP

1.2.5 Weight Assignment of Quinary Indicators

The weight of each quinary indicator of smart cockpit is shown in Table 1-6.

Table 1-6 Weights of Quinary Indicators Contained in Smart Cockpit

	Primary Indicator	Secon-dary Indic-ator	Tertiary Indicator	Quaternary Indicator		No.	Quinary Indicator	Wei-ght
Smart cockpit	Intelli-gent inter-action	Touch inter-action	Touch Screen effect	Display scenario		1	Pixel density	50%
						2	Luminance adjustment	50%
				Click scenario	Turning on local functions	1	Click response time	100 %
					Turning on connected functions	1	Click response time	100 %
				Sliding scenario	Sliding local functions	1	Sliding fluency	100 %
			Convenience of operation	Continuous interaction scenario	A/C setting Radio tuning	1	Total time of sight off road	40%
						2	Max time of sight off road	40%
						3	Number of steps	20%
			Mobile inter-connection	Bluetooth connection		1	Bluetooth reconnection success rate	100 %
				WiFi connection		1	Mobile WiFi connection	100 %
				Mobile screen projection		1	Mobile screen mirroring	60%
						2	Cross screen interconnection	40%
		Voice inter-action	Wakeup ability	Voice wakeup	Wakeup without noise	1	Wakeup success rate	70%
						2	Wakeup delay	30%
					Wakeup with noise	1	Wakeup success rate	100 %
					Wakeup with noise and background sound	1	Wakeup success rate	100 %
					Wakeup free	1	Wakeup success rate	100 %

Table 1-6 Weights of Quinary Indicators Contained in Smart Cockpit (Continued)

	Primary Indicator	Secon-dary Indic-ator	Tertiary Indicator	Quaternary Indicator		No.	Quinary Indicator	Wei-ght
Smart cockpit	Intelli-gent inter-action	Voice inter-action	Wakeup ability	Voice wakeup	Outside wakeup (score-deducting item)	1	Wakeup success rate	100 %
				Button wakeup		1	Wakeup success rate	100 %
			Inter-action ability	Driver's seat	Without noise-basic corpus interaction	1	Interaction success rate	80%
						2	Interaction response delay	20%
					With noise-basic corpus interaction	1	Interaction success rate	100 %
					Without noise-advanced corpus interaction	1	Interaction success rate	100 %
					Internet disconnected basic corpus interaction	1	Interaction success rate	100 %
				Passen-ger's seat	Without noise-basic corpus interaction	1	Sound source localization	100 %
		Wire-less inter-action	Appli-cation based vehicle control ability	Vehicle state display	Vehicle location	1	Function check	100 %
					Doors and windows	1	Function check	100 %
					Remaining mileage	1	Function check	100 %
					Tyre pressure	1	Function check	100 %
				Primary vehicle control	Window control	1	Vehicle control success rate	100 %
					A/C control	1	Vehicle control success rate	100 %
				Advan-ced vehicle control	Intelligent vehicle search	1	Vehicle control success rate	100 %

C-ICAP

Table 1-6 Weights of Quinary Indicators Contained in Smart Cockpit (Continued)

	Primary Indicator	Secon-dary Indic-ator	Tertiary Indicator	Quaternary Indicator		No.	Quinary Indicator	Wei-ght
Smart cockpit	Intelli-gent inter-action	Wire-less inter-action	Intelligent unlocking ability	Key-less unlock-ing	Application-based remote unlocking	1	Unlocking success rate	100 %
					Passive keyless entry	1	Unlocking success rate	100 %
					Bluetooth key	1	Unlocking success rate	100 %
					NFC unlocking	1	Unlocking success rate	100 %
				Bio-metric recogni-tion	Face recognition	1	Unlocking success rate	100 %
	Intelli-gent escort	Intelli-gent vision expan-sion	Around view monitoring	Daytime reverse scenario		1	Activation time	35%
						2	Realistic zoom	30%
						3	Splicing quality	30%
						4	Observation angle	5%
			Head up display	Night scenario		1	Displayed information luminance	20%
						2	Displayed information size	20%
						3	Displayed information ghosting	10%
						4	Imaging distance	15%
						5	Downward-view angle	15%
						6	Field of view	15%
						7	Display contents	5%

C-ICAP

Table 1-6 Weights of Quinary Indicators Contained in Smart Cockpit (Continued)

	Primary Indicator	Secon-dary Indic-ator	Tertiary Indicator	Quaternary Indicator		No.	Quinary Indicator	Wei-ght
Smart cockpit	Intelli-gent escort	Vision anti-Interfer-ence	Anti-glare	Central control screen homepage interface /navigation interface/music interface. Keep ambient lamp on+central control screen homepage interface\navigation interface\music interface (score-deducting item)		1	Forward vision area luminance	25%
						2	Left rearview mirror area luminance	15%
						3	Right rearview mirror area luminance	15%
						4	Central control screen vision area luminance	30%
						5	Artifact	15%
	Smart service	Wel-coming scen-ario	Vehicle body accessory linkage	Automatic rearview mirror unfolding		1	Function check	100 %
			On-board computer IP steward	Physical or virtual on-board computer IP steward image		1	Function check	100 %
				Personalized sound		1	Function check	100 %
		Driving scen-ario	Intelligent seat	Tem-perature adjustment	Seat ventilation	1	Function check	100 %
					Seat heating	1	Function check	100 %
				Position adjustment	Position memory	1	Function check	100 %
					Distinc-tive mode	1	Function check	100 %
				Seat massage		1	Function check	100 %
			Intelligent A/C	Automatic ventilation		1	Function check	100 %
			Software ecology in on-board computer	Types of software applications		1	Function check	100 %
			Intelligent Ambient lamp	Ambient lamp adjustment		1	Function check	100 %
		Seeing off scen-ario	Intelligent locking after leaving	Automatic locking after leaving		1	Function check	100 %

CICAP

1.3 Score Calculation Methods

1.3.1 Calculation Method of Total Score

The total score of smart cockpit shall be calculated according to the scores and weights of all primary indicators, and shall be rounded to two places after the decimal separator. The calculation method is shown in Equation (1-1).

$$S = \sum_{i=1}^{3} S_i \times b_i \tag{1-1}$$

In which: S is the total score of smart cockpit, and i is the serial number of primary indicator. S_i and b_i are respectively the score and weight of the ith primary indicator.

1.3.2 Score Calculation Method of Primary Indicator

The score of a primary indicator shall be calculated according to the scores and weights of all secondary indicators under such secondary indicator, and shall be rounded to two places after the decimal separator. The calculation method is shown in Equation (1-2).

$$S_i = \sum_{j=1}^{n_i} S_{ij} \times b_{ij} \tag{1-2}$$

In which: S_i is the score of primary indicator, i is the serial number of primary indicator, j is the serial number of secondary indicator, and n_i is the number of secondary indicators contained in the ith primary indicator. S_{ij} and b_{ij} are respectively the score and weight of the jth secondary indicator.

1.3.3 Score Calculation Method of Secondary Indicator

The score of a secondary indicator shall be calculated according to the scores and weights of all tertiary indicators under such secondary indicator, and shall be rounded to two places after the decimal separator. The calculation method is shown in Equation (1-3).

$$S_{ij} = \sum_{k=1}^{n_{ij}} S_{ijk} \times b_{ijk} \tag{1-3}$$

In which: S_{ij} is the score of secondary indicator, i is the serial number of primary indicator, j is the serial number of secondary indicator, k is the serial number of tertiary indicator, and n_{ij} is the number of tertiary indicators contained in the jth secondary indicator of the ith primary indicator. S_{ijk} and b_{ijk} are respectively the score and weight of the kth tertiary indicator.

1.3.4 Score Calculation Method of Tertiary Indicator

The score of a tertiary indicator shall be calculated according to the scores and weights of all quaternary indicators under such tertiary indicator, and shall be rounded to two places after the decimal separator. The calculation method is shown in Equation (1-4).

$$S_{ijk} = \sum_{l=1}^{n_{ijk}} S_{ijkl} \times b_{ijkl} \tag{1-4}$$

In which: S_{ijk} is the score of tertiary indicator, i is the serial number of primary indicator, j is the

serial number of secondary indicator, k is the serial number of tertiary indicator, l is the serial number of quaternary indicator, and n_{ijk} is the number of quaternary indicators contained in the kth tertiary indicator of the jth secondary indicator of the ith primary indicator. S_{ijkl} and b_{ijkl} are respectively the score and weight of the lth quaternary indicator.

1.3.5 Score Calculation Method of Quaternary Indicators

The score of a quaternary indicator shall be calculated according to the scores and weights of all quinary indicators under such quaternary indicator, and shall be rounded to two places after the decimal separator. The calculation method is shown in Equation (1-5).

$$S_{ijkl} = \sum_{m=1}^{n_{ijkl}} S_{ijklm} \times b_{ijklm} \tag{1-5}$$

In which: S_{ijkl} is the score of quaternary indicator, i is the serial number of primary indicator, j is the serial number of secondary indicator, k is the serial number of tertiary indicator, l is the serial number of quaternary indicator, m is the serial number of quinary indicator, and n_{ijkl} is the number of quinary indicators contained in the lth quaternary indicator of the kth tertiary indicator of the jth secondary indicator of the ith primary indicator. S_{ijklm} and b_{ijklm} are respectively the score and weight of the mth quinary indicator.

1.3.6 Notes to Scores of Quinary Indicators

1.3.6.1 Notes to Scores of Touch Screen Effect

1.3.6.1.1 Notes to Scores of Display Scenario

(1) Notes to Scores of Pixel Density

The notes to scores of pixel density are given in Table 1-7.

Table 1-7 Notes to Scores of Pixel Density

Quinary Indicator	Notes to Scores	Score
Pixel density	Pixel density ≥180	100
	170≤ Pixel density <180	75
	160≤ Pixel density <170	50
	150≤ Pixel density <160	25
	Pixel density <150	0

(2) Notes to Scores of Luminance Adjustment

The notes to scores of luminance adjustment are given in Table 1-8.

Table 1-8 Notes to Scores of Luminance Adjustment

Quinary Indicator	Notes to Scores	Score
Luminance adjustment	The manual and adaptive adjustment is supported	100
	Only the manual adjustment is supported	50
	Not supported	0

1.3.6.1.2 Notes to Scores of Click Scenario - Turning on Local Functions

(1) Notes to Scores of Click Response Time

The notes to scores of click response time are given in Table 1-9.

Table 1-9 Notes to Scores of Click Response Time

Quinary Indicator	Notes to Scores		Score
Click response time	Enter the A/C interface	Click response time ≤0.5s	50
		0.5s< Click response time ≤0.7s	35
		0.7s< Click response time ≤0.9s	20
		Click response time >0.9s	0
	Answer the phone call	Click response time ≤0.9s	50
		0.9s< Click response time ≤1.6s	40
		1.6s< Click response time ≤2.3s	30
		2.3s< Click response time ≤3.0s	20
		Click response time >3.0s	0

1.3.6.1.3 Notes to Scores of Click Scenario - Turning on Connected Function

(1) Notes to Scores of Click Response Time

The notes to scores of click response time are given in Table 1-10.

Table 1-10 Notes to Scores of Click Response Time

Quinary Indicator	Notes to Scores		Score
Click response time	Start the navigation	Click response time ≤1.8s	40
		1.8s< Click response time ≤2.4s	30
		2.4s< Click response time ≤3.0s	20
		3.0s< Click response time ≤3.6s	10
		Click response time >3.6s	0
	Turn up the music	Click response time ≤1.0s	30
		1.0s< Click response time ≤2.0s	25
		2.0s< Click response time ≤3.0s	20
		3.0s< Click response time ≤4.0s	15
		Click response time >4.0s	0
	Turn on the video	Click response time ≤2.0s	30
		2.0s< Click response time ≤3.0s	25
		3.0s< Click response time ≤4.0s	20
		4.0s< Click response time ≤5.0s	15
		Click response time >5.0s	0

1.3.6.1.4 Notes to Scores of Sliding Scenario - Sliding Local Functions

(1) Notes to Scores of Sliding Fluency

The notes to scores of sliding fluency are given in Table 1-11.

Table 1-11 Notes to Scores of Sliding Fluency

Quinary Indicator	Notes to Scores			Score
Sliding fluency	Sliding contact list	Maximum successive frame stuttering count <3	Average frame rate ≥95%·N	100
			85%·N≤ Average frame rate <95%·N	50
			Average frame rate <85%·N	0
		Maximum successive frame stuttering count ≥3		0

1.3.6.2 Notes to Scores of Convenience of operation

1.3.6.2.1 Notes to Scores of Continuous Interaction Scenario - A/C Setting

(1) Notes to Scores of Total Time of Sight Off Road

The notes to scores of total time of sight off road are given in Table 1-12.

Table 1-12 Notes to Scores of Total Time of Sight Off Road

Quinary Indicator	Scoring Rules	Score
Total time of sight off road	Total time of sight off road ≤7s	100
	7s< Total time of sight off road ≤9s	50
	Total time of sight off road >9s	0

(2) Notes to Scores of Max Time of Sight Off Road

The notes to scores of max time of sight off road are given in Table 1-13.

Table 1-13 Notes to Scores of Max Time of Sight Off Road

Quinary Indicator	Scoring Rules	Score
Max time of sight off road	Max time of sight off road ≤2s	100
	2s< Max time of sight off road ≤3s	50
	Max time of sight off road >3s	0

(3) Notes to Scores of Number of Steps

The notes to scores of number of steps are given in Table 1-14.

Table 1-14 Notes to Scores of Number of Steps

Quinary Indicator	Scoring Rules	Score
Number of steps	Number of steps ≤4	100
	4< Number of steps ≤6	50
	Number of steps >6	0

1.3.6.2.2 Notes to Scores of Continuous Interaction Scenario - Radio Tuning

(1) Notes to Scores of Total Time of Sight Off Road

The notes to scores of total time of sight off road are given in Table 1-15.

Table 1-15 Notes to Scores of Total Time of Sight Off Road

Quinary Indicator	Scoring Rules	Score
Total time of sight off road	Total time of sight off road ≤7s	100
	7s< Total time of sight off road ≤12s	50
	Total time of sight off road >12s	0

(2) Notes to Scores of Max Time of Sight Off Road

The notes to scores of max time of sight off road are given in Table 1-16.

Table 1-16 Notes to Scores of Max Time of Sight Off Road

Quinary Indicator	Scoring Rules	Score
Max time of sight off road	Max time of sight off road≤2s	100
	2s< max time of sight off road≤3s	50
	Max time of sight off road>3s	0

C-ICAP

(3) Notes to Scores of Number of Steps

The notes to scores of number of steps are given in Table 1-17.

Table 1-17 Notes to Scores of Number of Steps

Quinary Indicator	Scoring Rules	Score
Number of steps	Number of steps≤4	100
	4< Number of steps ≤6	50
	Number of steps >6	0

1. 3. 6. 3 Notes to Scores of Mobile Interconnection

1. 3. 6. 3. 1 Notes to Scores of Bluetooth Connection

(1) Notes to Scores of Bluetooth reconnection Success rate

The notes to scores of Bluetooth reconnection success rate are given in Table 1-18.

Table 1-18 Notes to Scores of Bluetooth reconnection Success Rate

Quinary Indicator	Notes to Scores	Score
Bluetooth reconnection success rate	reconnection success rate ≥98%	100
	94%≤ reconnection success rate <98%	50
	reconnection success rate <94%	0

1. 3. 6. 3. 2 Notes to Scores of WiFi Connection

(1) Notes to Scores of Mobile WiFi Connection

The notes to scores of mobile WiFi connection are given in Table 1-19.

Table 1-19 Notes to Scores of Mobile WiFi Connection

Quinary Indicator	Notes to Scores	Score
Mobile WiFi connection	The WiFi connection is supported	100
	The WiFi connection is not supported	0

1. 3. 6. 3. 3 Mobile Screen Projection Notes to Scores

(1) Notes to Scores of Mobile screen mirroring

The notes to scores of Mobile screen mirroring are given in Table 1-20.

Table 1-20 Notes to Scores of Mobile screen mirroring

Quinary Indicator	Notes to Scores	Score
Mobile screen mirroring	Number of Mobile screen mirroring applications supported ≥2	100
	1≤ Number of Mobile screen mirroring applications supported <2	50
	No Mobile screen mirroring applications is supported	0

(2) Notes to Scores of cross screen interconnection

The notes to scores of cross screen interconnection are given in Table 1-21.

Table 1-21 Notes to Scores of Cross Screen Interconnection

Quinary Indicator	Notes to Scores	Score
Cross screen interconnection	The cross screen interconnection is supported	100
	The cross screen interconnection is not supported	0

1.3.6.4 Notes to Scores of Wakeup Ability

1.3.6.4.1 Notes to Scores of Voice Wakeup - Wakeup Without Noise

(1) Notes to Scores of Wakeup Success Rate

The notes to scores of wakeup success rate are given in Table 1-22.

Table 1-22 Notes to Scores of Wakeup Success Rate

Quinary Indicator	Notes to Scores	Score
Wakeup success rate	wakeup success rate ≥98%	100
	96%≤ Wakeup success rate <98%	80
	94%≤ Wakeup success rate <96%	60
	92%≤ Wakeup success rate <94%	40
	90%≤ Wakeup success rate <92%	20
	wakeup success rate <90%	0

(2) Notes to Scores of Wakeup Delay

The notes to scores of wakeup delay are given in Table 1-23.

Table 1-23 Notes to Scores of Wakeup Delay

Quinary Indicator	Notes to Scores	Score
Wakeup delay	Wakeup delay <0.80s	100
	0.80s≤ Wakeup delay <1.00s	80
	1.00s≤ Wakeup delay <1.20s	60
	1.20s≤ Wakeup delay <1.40s	40
	1.40s≤ Wakeup delay <1.60s	20
	Wakeup delay ≥1.60s	0

1.3.6.4.2 Notes to Scores of Voice Wakeup - Wakeup with Noise

(1) Notes to Scores of Wakeup Success Rate

The notes to scores of wakeup success rate are given in Table 1-24.

Table 1-24 Notes to Scores of Wakeup Success Rate

Quinary Indicator	Notes to Scores		Score
Wakeup success rate	Typical noise scenario (60km/h)	Wakeup success rate ≥94%	50
		92%≤ Wakeup success rate <94%	40
		90%≤ Wakeup success rate <92%	30
		88%≤ Wakeup success rate <90%	20
		86%≤ Wakeup success rate <88%	10
		Wakeup success rate <86%	0
	Typical noise scenario (120km/h or maximum design speed of vehicle)	Wakeup success rate ≥91%	50
		89%≤ Wakeup success rate <91%	40
		87%≤ Wakeup success rate <89%	30
		85%≤ Wakeup success rate <87%	20
		83%≤ Wakeup success rate <85%	10
		Wakeup success rate <83%	0

1.3.6.4.3 Notes to Scores of Voice Wakeup - Wakeup with Noise and Background Sound

(1) Notes to Scores of Wakeup Success Rate

The notes to scores of wakeup success rate are given in Table 1-25.

Table 1-25 Notes to Scores of Wakeup Success Rate

Quinary Indicator	Notes to Scores		Score
Wakeup success rate	Typical noise scenario (60km/h)	Wakeup success rate ≥94%	50
		92%≤ Wakeup success rate <94%	40
		90%≤ Wakeup success rate <92%	30
		88%≤ Wakeup success rate <90%	20
		86%≤ Wakeup success rate <88%	10
		Wakeup success rate <86%	0
	Typical noise scenario (120km/h or maximum design speed of vehicle)	Wakeup success rate ≥91%	50
		89%≤ Wakeup success rate <91%	40
		87%≤ Wakeup success rate <89%	30
		85%≤ Wakeup success rate <87%	20
		83%≤ Wakeup success rate <85%	10
		Wakeup success rate <83%	0

1.3.6.4.4 Notes to Scores of Voice Wakeup - Wakeup free

(1) Notes to Scores of Wakeup Success Rate

The notes to scores of wakeup success rate are given in Table 1-26.

Table 1-26 Notes to Scores of Wakeup Success rate

Quinary Indicator	Notes to Scores	Score
Wakeup success rate	Wakeup success rate ≥60%	100
	Wakeup success rate <60%	0

1.3.6.4.5 Notes to Scores of Voice Wakeup - Outside wakeup

(1) Notes to Scores of Wakeup Success Rate

The notes to scores of wakeup success rate are given in Table 1-27.

Table 1-27 Notes to Scores of Wakeup Success Rate

Quinary Indicator	Notes to Scores	Score
wakeup success rate	Wakeup success rate＝0%	0
	Wakeup success rate >0%	-100

1.3.6.4.6 Notes to Scores of Button Wakeup

(1) Notes to Scores of Wakeup Success Rate

The notes to scores of wakeup success rate are given in Table 1-28.

Table 1-28 Notes to Scores of Wakeup Success Rate

Quinary Indicator	Notes to Scores	Score
wakeup success rate	Wakeup success rate=100%	100
	95%≤ Wakeup success rate <100%	50
	Wakeup success rate <95%	0

1.3.6.5 Notes to Scores of Interaction Ability

1.3.6.5.1 Notes to Scores of Driver's Seat - Without Noise-Basic Corpus Interaction

(1) Notes to Scores of Interaction Success rate

The notes to scores of interaction success rate are given in Table 1-29.

Table 1-29 Notes to Scores of Interaction Success Rate

Quinary Indicator	Notes to Scores			Score
Interaction success rate	Standard mandarin		Interaction success rate ≥98%	85
			93%≤ Interaction success rate <98%	70
			88%≤ interaction success rate <93%	55
			83%≤ Interaction success rate <88%	40
			78%≤ Interaction success rate <83%	25
			Interaction success rate <78%	0
	Dialect	Cantonese	Interaction success rate ≥80%	2.5
			Interaction success rate <80%	0
		Sichuan Dialect	Interaction success rate ≥80%	2.5
			Interaction success rate <80%	0
	Regional accent	Chongqing accent	Interaction success rate ≥90%	2.5
			Interaction success rate <90%	0
		Guangzhou accent	Interaction success rate ≥90%	2.5
			Interaction success rate <90%	0
		Shanghai accent	Interaction success rate ≥90%	2.5
			Interaction success rate <90%	0
		Wuhan accent	Interaction success rate ≥90%	2.5
			Interaction success rate <90%	0

(2) Notes to Scores of Interaction Response Delay

The notes to scores of interaction response delay are given in Table 1-30.

Table 1-30 Notes to Scores of Interaction Response Delay

Quinary Indicator	Notes to Scores	Score
Interaction response delay	Interaction response delay <1.00s	100
	1.00s≤ Interaction response delay <1.50s	80
	1.50s≤ Interaction response delay <2.00s	60
	2.00s≤ Interaction response delay <2.50s	40
	2.50s≤ Interaction response delay <3.00s	20
	Interaction response delay ≥3.00s	0

1.3.6.5.2 Notes to Scores of Driver's Seat - Without Noise-Basic Corpus Interaction

(1) Notes to Scores of Interaction Success Rate

The notes to scores of interaction success rate are given in Table 1-31.

Table 1-31 Notes to Scores of Interaction Success Rate

Quinary Indicator	Notes to Scores		Score
Interaction success rate	Typical noise scenario (60km/h)	Interaction success rate ≥92%	50
		87%≤ Interaction success rate <92%	40
		82%≤ Interaction success rate <87%	30
		77%≤ Interaction success rate <82%	20
		72%≤ interaction success rate<77%	10
		Interaction success rate <72%	0

Table 1-31 Notes to Scores of Interaction Success Rate(continued)

Quinary Indicator	Notes to Scores		Score
Interaction success rate	Typical noise scenario (120km/h or maximum design speed of vehicle)	Interaction success rate ≥88%	50
		83%≤ Interaction success rate <88%	40
		78%≤ Interaction success rate <83%	30
		73%≤ Interaction success rate <78%	20
		68%≤ Interaction success rate <73%	10
		Interaction success rate <68%	0

1.3.6.5.3 Notes to Scores of Driver's Seat - Without Noise - Advanced Corpus Interaction

(1) Notes to Scores of Interaction Success Rate

The notes to scores of interaction success rate are given in Table 1-32.

Table 1-32 Notes to Scores of Interaction Success Rate

Quinary Indicator	Notes to Scores		Score
Interaction success rate	Multiple intentions in one sentence	Interaction success rate ≥60%	25
		Interaction success rate <60%	0
	Multi-round interaction	Interaction success rate ≥60%	25
		Interaction success rate <60%	0
	Semantic comprehension	Interaction success rate ≥60%	25
		Interaction success rate <60%	0
	Visible to say	Interaction success rate ≥60%	25
		Interaction success rate <60%	0

1.3.6.5.4 Notes to Scores of Driver's Seat - Internet Disconnected - Basic Corpus Interaction

(1) Notes to Scores of Interaction Success Rate

The notes to scores of interaction success rate are given in Table 1-33.

Table 1-33 Notes to Scores of Interaction Success Rate

Quinary Indicator	Notes to Scores	Score
Interaction success rate	Interaction success rate ≥80%	100
	60%≤ Interaction success rate <80%	70
	40%≤ Interaction success rate <60%	40
	Interaction success rate< 40%	0

1.3.6.5.5 Notes to Scores of Passenger's Seat - Without Noise - Basic Corpus Interaction

(1) Notes to Scores of Sound Source Localization

The notes to scores of sound source localization are given in Table 1-34.

Table 1-34 Notes to Scores of Sound Source Localization

Quinary Indicator	Notes to Scores		Score
Sound source localization	Front passenger's seat	The sound source localization for both window control function and A/C control function is supported	50
		The sound source localization for either window control function or A/C control function is supported	25
		The sound source localization for window control function and A/C control function is not supported	0

Table 1-34 Notes to Scores of Sound Source Localization(continued)

Quinary Indicator	Notes to Scores		Score
Sound source localization	Rear seat	The sound source localization for window control function with respect to two or more seats is supported	50
		The sound source localization for window control function with respect to one seat is supported	25
		The sound source localization for window control function and A/C control function is not supported	0

1.3.6.6 Notes to Scores of Application-Based Vehicle Control Ability

1.3.6.6.1 Notes to Scores of Vehicle State Display - Vehicle Location

a) Notes to Scores of Function Check

The notes to scores of function check for vehicle state display - vehicle location are given in Table 1-35.

Table 1-35 Notes to Scores of Function Check for Vehicle State Display -Vehicle Location

Quinary Indicator	Notes to Scores	Score
Function check	Vehicle state display - Vehicle location is supported	100
	Vehicle state display - Vehicle location is not supported	0

1.3.6.6.2 Notes to Scores of Vehicle State Display - Doors and windows

(1) Notes to Scores of Function Check

The notes to scores of function check for vehicle state display - Doors and windows are given in Table 1-36.

Table 1-36 Notes to Scores of Function Check for Vehicle State Display - Doors and windows

Quinary Indicator	Notes to Scores	Score
Function check	Vehicle state display - Doors and windows is supported	100
	Vehicle state display - Doors and windows is not supported	0

1.3.6.6.3 Notes to Scores of Vehicle State Display - Remaining Mileage

(1) Notes to Scores of Function Check

The notes to scores of function check for vehicle state display - remaining mileage are given in Table 1-37.

Table 1-37 Notes to Scores of Function Check for Vehicle State Display - Remaining Mileage

Quinary Indicator	Notes to Scores	Score
Function check	Vehicle state display - Remaining mileage is supported	100
	Vehicle state display - Remaining mileage is not supported	0

1.3.6.6.4 Notes to Scores of Vehicle State Display - Tyre Pressure

(1) Notes to Scores of Function Check

The notes to scores of function check for vehicle state display - tyre pressure are given in Table 1-38.

Table 1-38 Notes to Scores of Function Check for Vehicle State Display - Tyre Pressure

Quinary Indicator	Notes to Scores	Score
Function check	Vehicle state display - Tyre pressure is supported	100
	Vehicle state display - Tyre pressure is not supported	0

1.3.6.6.5 Notes to Scores of Primary Vehicle Control - Window control

(1) Notes to Scores of Vehicle Control Success Rate

The notes to scores of vehicle control success rate are given in Table 1-39.

Table 1-39 Notes to Scores of Vehicle Control Success Rate

Quinary Indicator	Notes to Scores	Score
Vehicle control success rate	Vehicle control success rate ≥95%	100
	90%≤ Vehicle control success rate <95%	50
	Vehicle control success rate <90%	0

1.3.6.6.6 Notes to Scores of Primary Vehicle Control - A/C Control

(1) Notes to Scores of Vehicle Control Success Rate

The notes to scores of vehicle control success rate are given in Table 1-40.

Table 1-40 Notes to Scores of Vehicle Control Success Rate

Quinary Indicator	Notes to Scores	Score
Vehicle control success rate	Vehicle control success rate ≥95%	100
	90%≤ Vehicle control success rate <95%	50
	Vehicle control success rate <90%	0

1.3.6.6.7 Notes to Scores of Advanced Vehicle Control - Intelligent Vehicle Search

(1) Notes to Scores of Vehicle Control Success Rate

The notes to scores of vehicle control success rate are given in Table 1-41.

Table 1-41 Notes to Scores of Vehicle Control Success Rate

Quinary Indicator	Notes to Scores	Score
Vehicle control success rate	Vehicle control success rate ≥95%	100
	90%≤ Vehicle control success rate <95%	50
	Vehicle control success rate <90%	0

1.3.6.7 Notes to Scores of Intelligent Unlocking Ability

1.3.6.7.1 Notes to Scores of Keyless Unlocking - Application-based Remote Unlocking

(1) Notes to Scores of Unlocking Success Rate

The notes to scores of unlocking success rate are given in Table 1-42.

Table 1-42 Notes to Scores of Unlocking Success Rate

Quinary Indicator	Notes to Scores	Score
Unlocking success rate	Unlocking success rate ≥95%	100
	90%≤ Unlocking success rate <95%	50
	Unlocking success rate <90%	0

1.3.6.7.2 Notes to Scores of Keyless Unlocking - Passive Keyless Entry

(1) Notes to Scores of Unlocking Success Rate

The notes to scores of unlocking success rate are given in Table 1-43.

Table 1-43 Notes to Scores of Unlocking Success Rate

Quinary Indicator	Notes to Scores		Score
Unlocking success rate	Physical key	Unlocking success rate≥95%	40
		90%≤ Unlocking success rate <95%	20
		Unlocking success rate <90%	0
	Mobile key (HarmonyOS)	Unlocking success rate ≥95%	20
		90%≤ Unlocking success rate <95%	10
		Unlocking success rate <90%	0
	Mobile key (iOS)	Unlocking success rate ≥95%	20
		90%≤ Unlocking success rate <95%	10
		Unlocking success rate <90%	0
	Mobile key (Android)	Unlocking success rate ≥95%	20
		90%≤ Unlocking success rate <95%	10
		Unlocking success rate<90%	0

1. 3. 6. 7. 3 Notes to Scores of Keyless Unlocking - Bluetooth Key

(1) Notes to Scores of Unlocking Success Rate

The notes to scores of unlocking success rate are given in Table 1-44.

Table 1-44 Notes to Scores of Unlocking Success Rate

Quinary Indicator	Notes to Scores	Score
Unlocking success rate	Unlocking success rate ≥95%	100
	90%≤ Unlocking success rate <95%	50
	Unlocking success rate <90%	0

1. 3. 6. 7. 4 Notes to Scores of Keyless Unlocking - NFC Unlocking

(1) Notes to Scores of Unlocking Success Rate

The notes to scores of unlocking success rate are given in Table 1-45.

Table 1-45 Notes to Scores of Unlocking Success Rate

Quinary Indicator	Notes to Scores		Score
Unlocking success rate	NFC card key	Unlocking success rate ≥95%	25
		90%≤ Unlocking success rate <95%	15
		Unlocking success rate <90%	0
	Mobile NFC key (HarmonyOS)	Unlocking success rate ≥95%	25
		90%≤ Unlocking success rate <95%	15
		Unlocking success rate <90%	0
	Mobile NFC key (iOS)	Unlocking success rate ≥95%	25
		90%≤ Unlocking success rate <95%	15
		Unlocking success rate <90%	0
	Mobile NFC key (Android)	Unlocking success rate ≥95%	25
		90%≤ Unlocking success rate <95%	15
		Unlocking success rate <90%	0

1.3.6.7.5 Notes to Scores of Biometric Recognition - Face Recognition

(1) Notes to Scores of Unlocking Success Rate

The notes to scores of unlocking success rate are given in Table 1-46.

Table 1-46 Notes to Scores of Unlocking Success Rate

Quinary Indicator	Notes to Scores	Score
Unlocking success rate	Unlocking success rate ≥95%	100
	90%≤ Unlocking success rate <95%	50
	Unlocking success rate <90%	0

1.3.6.8 Notes to Scores of Around View Monitoring

1.3.6.8.1 Notes to Scores of Daytime Reverse Scenario

(1) Notes to Scores of Activation Time

The notes to scores of activation time are given in Table 1-47.

Table 1-47 Notes to Scores of Activation Time

Quinary Indicator	Notes to Scores	Score
Activation time	Activation time ≤1.0s	100
	1.0s< Activation time ≤1.5s	75
	1.5s< Activation time ≤2.0s	50
	Activation time >2.0s	0

(2) Notes to Scores of Realistic Zoom

The notes to scores of realistic zoom are given in Table 1-48.

Table 1-48 Notes to Scores of Realistic Zoom

Quinary Indicator	Notes to Scores	Score
Realistic zoom	All display sizes ≥20 arc minutes	100
	15 arc minutes ≤ All display sizes <20 arc minutes	75
	10 arc minutes ≤ All display sizes <15 arc minutes	50
	All display sizes <10 arc minutes	0

(3) Notes to Scores of Splicing Quality

The notes to scores of splicing quality are given in Table 1-49.

Table 1-49 Notes to Scores of Splicing Quality

Quinary Indicator	Notes to Scores	Score
Splicing quality	Within the visible range of the plane splicing view: There is no visible splicing gap such as black or color; the actual distance corresponding to each splicing dislocation does not exceed 0.4m; the actual area corresponding to the sum of all splicing ghostings and all splicing losses in any four cells arranged in a field-character shape does not exceed 0.15m^2, and the total proportion of splicing ghostings and splicing losses does not exceed 3%.	100

Table 1-49 Notes to Scores of Splicing Quality(Continued)

Quinary Indicator	Notes to Scores	Score
Splicing quality	Within the visible range of the plane splicing view: There is no visible splicing gap such as black or color; the actual distance corresponding to each splicing dislocation does not exceed 0.5m; the actual area corresponding to the sum of all splicing ghostings and all splicing losses in any four cells arranged in a field-character shape does not exceed 0.6m^2, and the total proportion of splicing ghostings and splicing losses does not exceed 5%.	75
	Within the visible range of the plane splicing view: There is no visible splicing gap such as black or color; the actual distance corresponding to each splicing dislocation does not exceed 0.6m; the actual area corresponding to the sum of all splicing ghostings and all splicing losses in any four cells arranged in a field-character shape does not exceed 1.0m^2, and the total proportion of splicing ghostings and splicing losses does not exceed 10%.	50
	Within the visible range of the plane splicing view: There are visible splicing gaps such as black or color; the actual distance corresponding to each splicing dislocation exceed 0.6m; the actual area corresponding to the sum of all splicing ghostings and all splicing losses in any four cells arranged in a field-character shape exceed 1.0m^2, and the total proportion of splicing ghostings and splicing losses exceed 10%.	0

(4) Notes to Scores of Observation Angle

The notes to scores of observation angle are given in Table 1-50.

Table 1-50 Notes to Scores of Observation Angle

Quinary Indicator	Notes to Scores	Score
Observation angle	The AVMS provides panoramic image, and its spliced view can display a 3D perspective, which is adjustable.	100
	The AVMS provides panoramic image, and its spliced view can display a 3D perspective, which is not adjustable.	75
	The AVMS provides panoramic image, and its spliced view cannot display a 3D perspective, but only display a planar perspective	50
	The AVMS cannot provide panoramic image	0

1.3.6.9 Notes to Scores of Head Up Display

1.3.6.9.1 Notes to Scores of Night Scenario

(1) Notes to Scores of Displayed Information Luminance

The notes to scores of displayed information luminance are given in Table 1-51.

Table 1-51 Notes to Scores of Displayed Information Luminance

Quinary Indicator	Notes to Scores	Score
Displayed information luminance	15cd/m^2≤ Displayed information luminance ≤30cd/m^2	100
	30cd/m^2< Displayed information luminance ≤50cd/m^2 or 8cd/m^2≤ Displayed information luminance <15cd/m^2	75
	50cd/m^2< Displayed information luminance ≤100cd/m^2 or 2cd/m^2≤ Displayed information luminance<8cd/m^2	50
	Displayed information luminance>100cd/m^2 or displayed information luminance<2cd/m^2	0

(2) Notes to Scores of Displayed Information Size

The notes to scores of displayed information luminance are given in Table 1-52. If the score of vehicle speed-numerical is different from the score of navigation indicator-direction arrow, the item with the lower score shall prevail.

Table 1-52 Notes to Scores of Displayed Information Size

Quinary Indicator	Notes to Scores	Score
Displayed information size	Vehicle speed-numeral ≥31 arc minutes, Navigation indicator-direction arrow ≥30 arc minutes	100
	20 arc minutes ≤ vehicle speed-numeral <31 arc minutes, 19 arc minutes ≤ navigation indicator-direction arrow < 30 arc minutes	75
	16 arc minutes ≤ vehicle speed-numeral < 20 arc minutes, 15 arc minutes ≤ navigation indicator-direction arrow < 19 arc minutes	50
	Vehicle speed-numeral < 16 arc minutes, Navigation indicator-direction arrow < 15 arc minutes	0

(3) Notes to Scores of Displayed Information Ghosting

The notes to scores of displayed information ghosting are given in Table 1-53.

Table 1-53 Notes to Scores of Displayed Information Ghosting

Quinary Indicator	Notes to Scores	Score
Displayed information ghosting	Ghosting ≤ 1 arc minute	100
	1 arc minute < Ghosting ≤ 2 arc minutes	75
	2 arc minutes < Ghosting ≤ 3 arc minutes	50
	Ghosting > 3 arc minutes	0

(4) Notes to Scores of Imaging Distance

The notes to scores of imaging distance are given in Table 1-54.

Table 1-54 Notes to Scores of Imaging Distance

Quinary Indicator	Notes to Scores	Score
Imaging distance	Imaging distance ≥ 4m	100
	2m ≤ Imaging distance < 4m	75
	1.5m ≤ Imaging distance < 2m	50
	0m ≤ Imaging distance < 1.5m	0

(5) Notes to Scores of Downward-View Angle

The notes to scores of downward-view angle are given in Table 1-55.

Table 1-55 Notes to Scores of Downward-View Angle

Quinary Indicator	Notes to Scores	Score
Downward-view angle	1° ≤ Downward-view angle ≤ 2°	100
	2° < Downward-view angle ≤ 3.5°	75
	3.5° < Downward-view angle ≤ 5°	50
	Downward-view angle >5° or Downward-view angle <1°	0

(6) Notes to Scores of Field of view

The Field of view is expressed in HFOV × VFOV (horizontal Field of view × vertical Field of

view). The notes to scores are given in Table 1-56.

Table 1-56 Notes to Scores of Field of view

Quinary Indicator	Notes to Scores	Score
Field of view	HFOV×VFOV ≥5°×2°	100
	4°×1.5° ≤ HFOV×VFOV < 5°×2° or HFOV ≥ 4° and VFOV < 1.5° or HFOV < 4° and VFOV ≥ 1.5°	60
	HFOV×VFOV < 4°×1.5°	0

(7) Notes to Scores of Display Contents

The notes to scores of display contents are given in Table 1-57.

Table 1-57 Notes to Scores of Display Contents

Quinary Indicator	Notes to Scores		Score
Display contents	Vehicle speed display	There is the real-time speed display function	15
		There is no real-time speed display function	0
	Speed limit display	There is the speed limit display function for current road section	15
		There is no speed limit display function for current road section	0
	AR display effect	There is the AR effect, and the HUD's virtual image can provide augmented reality display capabilities for navigation, pedestrians or preceding vehicle, or other display contents, allowing drivers to combine the display of virtual images with the real world, rather than displaying simple data.	40
		There is no AR effect.	0
	Visual prompts for ADAS functions	There are the visual prompts for ADAS functions. The HUD's virtual image can provide the corresponding display contents for lane keeping (lane lines), object recognition (pedestrians, two-wheeled vehicles, and motor vehicles) or other ADAS functions.	15
		There is no visual prompt for ADAS functions.	0
	Driving status display	There is the driving status display function. The HUD’s virtual image can provide the corresponding display contents for the parking brake, radar perception, gear or other driving status of the vehicle.	15
		There is no driving status display function.	0

1.3.6.10 Notes to Scores of Anti-Glare

1.3.6.10.1 Notes to Scores of Homepage Interface

(1) Notes to Scores of Forward Vision Area Luminance

The notes to scores of forward vision area luminance are given in Table 1-58.

Table 1-58 Notes to Scores of Forward Vision Area Luminance

Quinary Indicator	Notes to Scores	Score
Forward vision area luminance	Luminance ≤5cd/m²	100
	5cd/m²< Luminance ≤10cd/m²	75
	10cd/m²< Luminance ≤15cd/m²	50
	Luminance >15cd/m²	0

(2) Notes to Scores of Left Rearview Mirror Area Luminance

The notes to scores of left rearview mirror area luminance are given in Table 1-59.

Table 1-59 Notes to Scores of Left Rearview Mirror Area Luminance

Quinary Indicator	Notes to Scores	Score
Left rearview mirror area luminance	Luminance ≤20cd/m²	100
	20cd/m²< luminance ≤30cd/m²	75
	30cd/m²< luminance ≤50cd/m²	50
	Luminance >50cd/m²	0

(3) Notes to Scores of Right Rearview Mirror Area Luminance

The notes to scores of right rearview mirror area luminance are given in Table 1-60.

Table 1-60 Notes to Scores of Right Rearview Mirror Area Luminance

Quinary indicator	Notes to Scores	Score
Right rearview mirror area luminance	Luminance ≤20cd/m²	100
	20cd/m²< Luminance ≤30 cd/m²	75
	30cd/m²< Luminance ≤50 cd/m²	50
	Luminance >50 cd/m²	0

(4) Notes to Scores of Central Control Screen Vision Area Luminance

The notes to scores of central control screen vision area luminance are given in Table 1-61, The score of central control screen vision area luminance is the sum of score of Area A and score of Area B. The area division in front of cockpit is shown in Figure 1-1.

Table 1-61 Notes to Scores of Central Control Screen Vision Area Luminance

Quinary Indicator	Notes to Scores		Score
Central control screen vision area luminance	Area A	Luminance ≤75cd/m²	70
		Luminance >75cd/m²	0
	Area B	Luminance ≤30cd/m²	30
		Luminance >30cd/m²	0

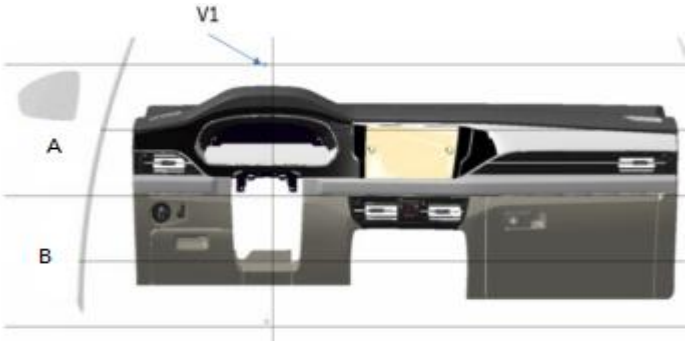

Figure 1-1 Schematic Diagram of Area Division in Front of Cockpit

(5) Notes to Scores Artifact

The notes to scores of artifact are given in Table 1-62.

Table 1-62 Notes to Scores of Artifact

Quinary Indicator	Notes to Scores		Score
Artifact	Forward vision area	There is no on-screen artifact	25
		There is on-screen artifact	0
	Front windshield (excluding forward vision) area	There is no on-screen artifact	10
		There is on-screen artifact	0
	Left rearview mirror area	There is no on-screen artifact	20
		There is on-screen artifact	0
	Right rearview mirror area	There is no on-screen artifact	20
		There is on-screen artifact	0
	Left windshield (excluding rearview mirror) area	There is no on-screen artifact	12.5
		There is on-screen artifact	0
	Right windshield (excluding rearview mirror) area	There is no on-screen artifact	12.5
		There is on-screen artifact	0

1.3.6.10.2 Notes to Scores of Navigation Interface

Please refer to Section 1.3.6.10.1 for score calculation.

1.3.6.10.3 Notes to Scores of Music Interface

Please refer to Section 1.3.6.10.1 for score calculation.

1.3.6.10.4 Notes to Scores of Keep ambient lamp on+Central Control Screen Homepage Interface

(1) Notes to Scores of Forward Vision Area Luminance

The notes to scores of forward vision area luminance are given in Table 1-63.

Table 1-63 Notes to Scores of Forward Vision Area Luminance

Quinary Indicator	Notes to Scores	Score
Forward vision area luminance	Luminance ≤5cd/m²	0
	5cd/m²< Luminance ≤10cd/m²	-50
	10cd/m²< Luminance ≤15cd/m²	-75
	Luminance >15cd/m²	-100

(2) Notes to Scores of Left Rearview Mirror Area Luminance

The notes to scores of left rearview mirror area luminance are given in Table 1-64.

Table 1-64 Notes to Scores Left Rearview Mirror Area Luminance

Quinary Indicator	Notes to Scores	Score
Left rearview mirror area luminance	Luminance ≤20cd/m²	0
	20cd/m²< Luminance ≤30cd/m²	-50
	30cd/m²< Luminance ≤50cd/m²	-75
	Luminance >50cd/m²	-100

(3) Notes to Scores of Right Rearview Mirror Area Luminance

The notes to scores of right rearview mirror area luminance are given in Table 1-65.

Table 1-65 Notes to Scores of Right Rearview Mirror Area Luminance

Quinary Indicator	Notes to Scores	Score
Right rearview mirror area luminance	Luminance ≤20cd/m²	0
	20cd/m²< Luminance ≤30cd/m²	-50
	30cd/m²< Luminance ≤50cd/m²	-75
	Luminance >50cd/m²	-100

(4) Notes to Scores of Central Control Screen Vision Area Luminance

The notes to scores of central control screen vision area luminance are given in Table 1-66. The score of central control screen vision area luminance is the sum of score of Area A and score of Area B.

Table 1-66 Notes to Scores of Central Control Screen Vision Area Luminance

Quinary Indicator	Notes to Scores		Score
Central control screen vision area luminance	Area A	Luminance ≤75cd/m²	0
		Luminance >75cd/m²	-70
	Area B	Luminance ≤30cd/m²	0
		Luminance >30cd/m²	-30

(5) Notes to Scores of Artifact

The notes to scores of artifact are given in Table 1-67.

Table 1-67 Notes to Scores of Artifact

Quinary Indicator	Notes to Scores		Score
Artifact	Forward vision area	There is neither Ambient lamp nor on-screen artifact	0
		There are Ambient lamp and on-screen artifact	-25
	Front windshield (excluding forward vision) area	There is neither Ambient lamp nor on-screen artifact	0
		There are Ambient lamp and on-screen artifact	-10
	Left rearview mirror area	There is neither Ambient lamp nor on-screen artifact	0
		There are Ambient lamp and on-screen artifact	-20
	Right rearview mirror area	There is neither Ambient lamp nor on-screen artifact	0
		There are Ambient lamp and on-screen artifact	-20
	Left windshield (excluding rearview mirror) area	There is neither Ambient lamp nor on-screen artifact	0
		There are Ambient lamp and on-screen artifact	-12.5
	Right windshield (excluding rearview mirror) area	There is neither Ambient lamp nor on-screen artifact	0
		There are Ambient lamp and on-screen artifact	-12.5

1.3.6.10.5 Notes to Scores of Keep ambient lamp on+Central Control Screen Navigation Interface

Please refer to Section 1.3.6.10.4 for score calculation.

1.3.6.10.6 Notes to Scores of Keep ambient lamp on+Central Control Screen Music Interface

Please refer to Section 1.3.6.10.4 for score calculation.

1.3.6.11 Notes to Scores of Vehicle Body Accessory Linkage

1.3.6.11.1 Notes to Scores of Automatic Rearview Mirror Unfolding

(1) Notes to Scores of Function Check

Notes to scores of function check for automatic rearview mirror unfolding are given in Table 1-68.

Table 1-68 Notes to Scores of Function Check for Automatic Rearview Mirror Unfolding

Quinary Indicator	Check Contents	Score
Function check	After the vehicle is unlocked, the rearview mirror will be unfolded automatically	100
	This function is not available	0

1.3.6.12 Notes to Scores of On-Board Computer IP Steward

1.3.6.12.1 Notes to Scores of Physical or Virtual On-Board Computer IP Steward Image

(1) Notes to Scores of Function Check

The notes to scores of function check for physical or virtual on-board computer IP steward image are given in Table 1-69.

Table 1-69 Notes to Scores of Function Check for Physical or Virtual On-Board Computer Ip Steward Image

Quinary Indicator	Check Contents	Score
Function check	The cockpit is equipped with the physical or virtual on-board computer IP steward image	100
	This function is not available	0

1.3.6.12.2 Notes to Scores of Personalized Sound

(1) Notes to Scores of Function Check

The notes to scores of function check for personalized sound are given in Table 1-70.

Table 1-70 Notes to Scores of Function Check for Personalized Sound

Quinary Indicator	Check Contents	Score
Function check	Types of personalized sound in voice interaction system ≥3	100
	1≤ Types of personalized sound in voice interaction system <3	50
	This function is not available	0

1.3.6.13 Notes to Scores of Intelligent Seat

1.3.6.13.1 Temperature Adjustment -Seat Ventilation Notes to Scores

(1) Notes to Scores of Function Check

The notes to scores of function check for temperature adjustment - seat ventilation are given in Table 1-71.

Table 1-71 Notes to Scores of Function Check for Temperature Adjustment - Seat Ventilation

Quinary Indicator	Check Contents	Score
Function check	The driver’s seat is equipped with the seat ventilation function	100
	This function is not available	0

1.3.6.13.2 Notes to Scores of Temperature Adjustment - Heating

(1) Notes to Scores of Function Check

The notes to scores of function check for temperature adjustment - seat heating are given in Table 1-72.

Table 1-72 Notes to Scores of Function Check for Temperature Adjustment - Seat Heating

Quinary Indicator	Check Contents	Score
Function check	The driver's seat is equipped with the seat heating function	100
	This function is not available	0

1.3.6.13.3 Notes to Scores of Position Adjustment - Position Memory

(1) Notes to Scores of Function Check

The notes to scores of function check for position adjustment - position memory are given in Table 1-73.

Table 1-73 Notes to Scores of Function Check for Position Adjustment - Position Memory

Quinary Indicator	Check Contents	Score
Function check	The driver's seat is equipped with the position memory function	100
	This function is not available	0

1.3.6.13.4 Notes to Scores of Position Adjustment - Distinctive mode

(1) Notes to Scores of Function Check

The notes to scores of function check for position adjustment - Distinctive mode are given in Table 1-74.

Table 1-74 Notes to Scores of Function Check for Position Adjustment - Distinctive mode

Quinary Indicator	Check Contents	Score
Function check	There is the featured seat mode	100
	This function is not available	0

1.3.6.13.5 Notes to Scores of Seat Massage

(1) Notes to Scores of Function Check

The notes to scores of function check for seat massage are given in Table 1-75.

Table 1-75 Notes to Scores of Function Check for Seat Massage

Quinary Indicator	Check Contents	Score
Function check	The driver's seat is equipped with the seat massage function	100
	This function is not available	0

1.3.6.14 Notes to Scores of Intelligent A/C

1.3.6.14.1 Notes to Scores of Automatic Ventilation

(1) Notes to Scores of Function Check

The notes to scores of function check for automatic ventilation are given in Table 1-76.

Table 1-76 Notes to Scores of Function Check for Automatic Ventilation

Quinary Indicator	Check Contents	Score
Function check	The on-board A/C has the function to monitor the interior air PM2.5 or the interior temperature and humidity and be turned on automatically for adjusting the interior environment of the vehicle	100
	This function is not available	0

1.3.6.15 Notes to Scores of Software Ecology in On-Board Computer

1.3.6.15.1 Notes to Scores of Types of software applications

(1) Notes to Scores of Function Check

The notes to scores of Types of software applications are given in Table 1-77.

Table 1-77 Notes to Scores of Function Check for Number and Types of Applications

Quinary Indicator	Scoring Rules		Score
Function check	Types of software which can be installed on on-board computer system	Types of software supported≥6	100
		5≤types of software supported<6	75
		4≤types of software supported<5	50
		3≤types of software supported<4	25
		Types of software supported <3	0

1.3.6.16 Notes to Scores of Intelligent Ambient lamp

1.3.6.16.1 Notes to Scores of Ambient lamp Adjustment

(1) Notes to Scores of Function Check

The notes to scores of function check for Ambient lamp adjustment are given in Table 1-78.

Table 1-78 Notes to Scores of Function Check for Ambient lamp Adjustment

Quinary Indicator	Scoring Rules	Score
Function check	There is Ambient lamp, the effect thereof is adjustable, and the Ambient lamp can change according to the rhythm of music playback or adapt to changes in ambient lamp	100
	There is Ambient lamp, and the effect thereof is adjustable	75
	There is Ambient lamp, but the effect thereof is not adjustable	50
	There is no Ambient lamp	0

1.3.6.17 Notes to Scores of Intelligent locking after leaving

1.3.6.17.1 Notes to Scores of Automatic locking after leaving

(1) Notes to Scores of Function Check

The notes to scores of function check for Automatic locking after leaving are given in Table 1-79.

Table 1-79 Notes to Scores of Function Check for Automatic locking after leaving

Quinary Indicator	Check Contents	Score
Function check	After the driver and passenger leave the vehicle (without locking the vehicle), the vehicle can be automatically locked	100
	This function is not available	0

2 Test Methods

2.1 Scope of Application

These Evaluation Rules apply to Category-M_1 passenger vehicles.

2.2 Normative Reference

The terms in the following documents constitute the terms of these Evaluation Rules by reference. For dated references, all subsequent amendments (excluding the contents of corrigendum) or revisions shall not apply to these Evaluation Rules.For undated references, the latest version shall apply to these Evaluation Rules.

CAC-PV18-081: 2021 CATARC Implementation rules for logo certification - automotive cockpit interaction certification (software interaction)

GB11555 Motor vehicles - windshield demisting and defrosting systems - performance requirements and test methods

GB11562 Motor vehicles - forward visibility for drivers - requirements and measurement methods

GB15084 Motor vehicles - devices for indirect vision - requirements of performance and installation

GB/T 18697-2002 Acoustics - Measurement of noise inside motor vehicles

White Paper on Classification and Comprehensive Evaluation of Automotive Intelligent Cockpits

ANSI/ASA S12.2-2008 Criteria for evaluating room noise

ISO 16673:2017 Road vehicles - Ergonomic aspects of transport information and control systems - Occlusion method to assess visual demand due to the use of in-vehicle systems

ITU-T P.58(1996) Head and torso simulator for telephonometry, HATS

ITU-T P.1110(2019) Wide-band hands-free communication in motor vehicles

2.3 Definitions

Central Control Screen

The central control screen inside the vehicle, also known as the on-board infotainment system control terminal.

Pixel Density

The number of pixels per inch of screen, expressed in PPI (pixels per inch, which is a pixel density unit). The calculation method is shown in Equation (2-1).

$$PPI = \sqrt{X^2 + Y^2} \big/ Z \tag{2-1}$$

In which: X is the number of pixels on length; Y is the number of pixels on width; Z is the size of screen (expressed in inch).

Response Time

The time from the moment when the touch command is input to the moment when the interface is completely refreshed and reaches a stable state that can be read when the user operates the central control screen. The calculation method is shown in Equation (2-2).

$$T_c = T_2 - T_1 \tag{2-2}$$

In which: T_c is the response time; T_1 is the moment when the touch command is input; T_2 is the moment when the interface is completely refreshed and reaches a stable state that can be read.

Maximum Successive Frame Stuttering Count

The maximum number of successive frames that cannot be properly shown due to the central control screen's refresh frequency being lower than the preset frame rate during the period from the beginning of a response to the end of the page refresh when the user operates the central control screen. The calculation method is shown in Equation (2-3).

$$P = \max(f_1, f_2, \ldots, f_n) \tag{2-3}$$

In which: P is the maximum successive frame stuttering count; $f_1, f_2, \ldots, f_n$ is the number of frames with a refresh rate lower than the preset frame rate.

Sliding Fluency

Sliding fluency means the extent to which the screen gets stuttered when the user slides the central control screen. Two parameters, namely maximum successive frame stuttering count and average frame rate, are used as the evaluation indicators. If the preset refresh frequency of the central control screen is N, and during one sliding process, the actual number of frames refreshed on the central control screen is f, the stuttering occurs for n times, and the number of frames stuttered each time is f_1, f_2, …, f_n respectively, then the calculation method for the average frame rate X is shown in Equation (2-4).

$$X = \frac{f - (f_1 + f_2 + \ldots + f_n)}{f} * N \tag{2-4}$$

Number of Sight Off Road

The number of the situation that the driver performs an interactive task such as A/C setting, navigation setting, music playback or phone call making and deviates his/her sight from the road to the screen, button or other operating object due to the operational need when driving the vehicle.

Max Time of Sight Off Road

The maximum time of sight off road achieved when the driver, while driving the vehicle, is performing an interactive task such as A/C setting, navigation setting, music playback or phone call making and deviating his/her sight from the road to the screen, button or other operating object due to the operational need.

Total Time of Sight Off Road

The total time of sight off road achieved during the whole interaction process when the driver, while driving the vehicle, is performing an interactive task such as A/C setting, navigation setting,

music playback or phone call making and deviating his/her sight from the road to the screen, button or other operating object due to the operational need.

Number of Steps

The number of steps that the driver needs to take when executing an interactive task such as A/C setting, navigation setting, music playback or phone call making while driving the vehicle. One operation of screen touch/physical button/physical knob will be counted as one step; the issuance of a voice command (which can include multiple commands) will be counted as one step.

Cross Screen Interconnection

With the collaboration of software and hardware between the head unit and the mobile phone, the mobile applications (navigation, music, videos, and etc.) can seamlessly switch or flow to the on-board central control screen, and the on-board computer interaction interface can be optimized for mobile applications, supporting the operations such as screen splitting and window adjustment, so as to achieve the sharing of ecological resources between on-board computer and mobile phone.

NC Curves

NC curves, also known as NC standard curves, are commonly used to evaluate the sound pressure level of indoor background noise

Head and Torso Simulator (HATS)

A manikin extending from the top of head down to the waist, which is equipped with a simulation ear and a simulation mouth. It is designed to simulate the sound pickup characteristics of ordinary human ears and the sound diffraction generated by medium-sized adults, and reproduce the sound field of human mouth pronunciation for electroacoustic measurement.

Simulation Mouth

Simulation mouth is a special artificial sound source used to simulate the average directionality and radiation pattern of a human mouth. The simulation south is equipped with a lip ring for positioning, which can be firmly fixed on the simulation south.

Lombard Effect

This effect refers to the change in speech behavior caused by noise.

Speech Wakeup Voice Trigger

A process whereby the voice interaction system in the audio stream monitoring state switches to another processing state such as command word recognition or continuous speech recognition after detecting a specific feature or event.

Wakeup Command Word

A structured keyword set used to awaken the voice interaction systems in keyword recognition state.

Wakeup Success Rate

The wakeup success rate is used to evaluate the probability that the on-board voice interaction system can be wakeup by the user's voice. If the on-board voice interaction system is successfully

awakened after receiving the user's voice wakeup command, the current voice wakeup shall be deemed as successful; if the on-board voice interaction system is not successfully awakened after receiving the user's voice wakeup command, the current voice wakeup shall be deemed as unsuccessful.

Wakeup Delay

The wakeup delay starts from the moment when the voice wakeup command operation ends and ends at the moment when the wakeup result is displayed on the central control screen.

Wakeup with nNoise and Background Sound

Namely voice interruption, which means that, during the playing of the sound, when the voice acquisition device detects the valid voice input, it will interrupt the playback of the sound and switch to another processing process such as speech recognition.

Dialect

Dialect is a branch of the Chinese language that differs from the standard Mandarin in pronunciation, vocabulary, and grammar, such as Cantonese and Sichuan Dialect.

Regional Accent

Regional accent means the language of which the pronunciation has certain local characteristics, and the vocabulary and grammar are consistent with the standard Mandarin, such as Chongqing accent, Guangzhou accent, Shanghai accent, and Wuhan accent.

Interaction Success Rate

The interaction success rate is used to evaluate whether the on-board voice interaction system can fully receive the user's daily voice commands and perform the corresponding tasks. If the on-board voice interaction system successfully executes the corresponding predetermined interaction task after receiving the user’s voice instruction, the voice interaction shall be deemed as successful; if the on-board voice interaction system fails to successfully execute the corresponding predetermined interaction task (e.g., exiting before completion of task, giving no response, or incorrectly executing the corresponding predetermined interaction task), the voice interaction shall be deemed as unsuccessful.

Interaction Response Delay

The interaction response delay starts from the moment when the voice command ends and ends at the moment when the interaction recognition results are displayed on the central control screen or when the voice sounds or when the response action begins to be executed.

Multiple Intentions In One Sentence

The ability of the voice interaction system to correctly understand the voice command that contains multiple intentions and respond correctly to such multiple intentions.

Multi-round Interaction

The ability of the on-board voice interaction system to gradually and correctly respond to multiple related voice commands from user.

Semantic Comprehension

The ability of the on-board voice interaction system to those understand semantically-ambiguous

or logically-complex user instructions.

Visible to Say

The function of the on-board voice interaction system to compare the recognized user voice commands with the text displayed on the central control screen, and simulate the user's click operation on the area where the highly-similar text is located on the central control screen. This function shall be available on any interface.

Vehicle Remote Control

When the user is away from the vehicle, he/she uses the mobile terminal to send control commands to the vehicle through communication method such as cellular network, so as to manipulate the vehicle to complete the corresponding operations.

Head Up Display System

An on-board electronic imaging system used to project the virtual image information such as vehicle speed and navigation within the driver's forward vision range, including imaging media and head up display.

Around View Monitoring System; AVMS

A system that provides the driver with the real-time image information of the environment around the vehicle.

Rear-View Camera System; RVCS

A system that provides the driver with the real-time image information of the rear of the vehicle in the environment which is not narrower than the width of the vehicle.

Splicing gGap

In the planar spliced view, there is a gap in the image acquired by adjacent camera after splicing, as shown in Figure 2-1.

a) Ideal splicing effect b) Splicing gap

Note: The area indicated by Δd is splicing gap.

Figure 2-1 Schematic Diagram of Splicing Gap

Splicing Dislocation

In the planar spliced view, the image acquired by adjacent camera is dislocated in the image after splicing, as shown in Figure 2-2.

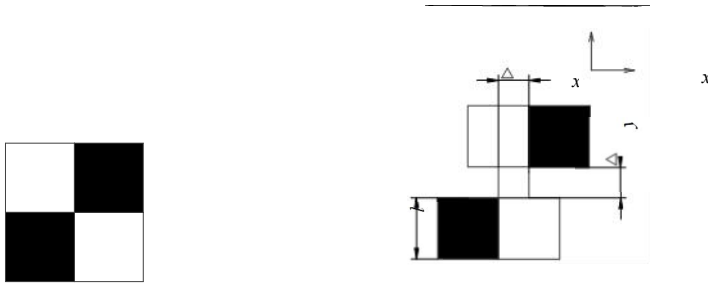

a) Ideal Splicing Effect **b) Splicing Dislocation**

Note: Δx is the splicing dislocation in x-direction, Δy is the splicing dislocation in y-direction, and l_1 is the edge length of a checkerboard card cell on the image.

Figure 2-2 Schematic Diagram of Splicing Dislocation

Splicing Ghosting

In the planar spliced view, the image acquired by adjacent camera is superimposed after splicing, as shown in Figure 2-3.

a) Ideal Splicing Effect **b) Splicing Ghosting**

Figure 2-3 Schematic Diagram of Splicing Ghosting

Splicing Loss

In the planar spliced view, the image acquired by adjacent camera is lost in the image after splicing, as shown in Figure 2-4.

a) Ideal Splicing Effect **b) Splicing Loss**

Figure 2-4 Schematic Diagram of Splicing Loss

Vehicle Control Through Mobile Application

The achievement of functions such as remote window control and remote A/C control by issuing the remote control commands to the vehicle through mobile application.

Primary Vehicle Control

The remote vehicle control functions with relatively high loading rate, which are achieved by means of application-based vehicle control, such as window control, and A/C control.

Advanced Vehicle Control

The remote vehicle control functions that can be achieved by means of application-based vehicle control, of which the loading rate is relatively low due to technical and cost reasons, such as intelligent vehicle search.

Keyless Unlocking

A method to unlock and lock the vehicle by means of application-based remote unlocking, passive keyless entry, NFC key or Bluetooth key without using a physical key.

Passive Keyless Entry

A vehicle unlocking and locking method whereby the vehicle will be automatically unlocked when a user carrying a physical key or a mobile phone equipped with Bluetooth unlocking activation function enters the sensing range, and pulls the door handle or touches a specific position or extends his/her hand into the sensing area, and the vehicle will be automatically locked when the user moves away from the vehicle or touches a specific position on the external door handle.

Bluetooth Unlocking

A method whereby the mobile vehicle control application is used to unlock and lock the vehicle within the coverage range of Bluetooth connection.

NFC Unlocking

A method whereby the near field communication (NFC) technology is used to unlock and lock the vehicle; for the purpose of these Evaluation Rules, the NFC unlocking method includes NFC card and mobile phone bound with NFC key.

Biometric Recognition

A technology for identifying the identity based on the inherent physiological and behavioral characteristics of human body, including face recognition, fingerprint recognition, palm print recognition, iris recognition, and voiceprint recognition; these Evaluation Rules mainly involve face recognition.

2.4 General

This Section describes the test methods for smart cockpit.

2.5 Test Items

2.5.1 Intelligent Interaction

2.5.1.1 Touch Interaction

2.5.1.1.1 Test Conditions

As for network conditions, the uplink bandwidth shall be no less than 200kbit/s, the downlink bandwidth shall be no less than 100kbit/s, and the stable connection state shall be maintained.

2.5.1.1.1.1 Test Site Conditions

a) The test road surface shall be dry, flat and solid, without visible moisture;

b) The test road surface shall be properly compacted and be free of irregular objects that may cause abnormal operation of sensor (such as large inclination angles, cracks, manhole covers, or reflective bolts).

2.5.1.1.1.2 Weather Conditions

a) The weather shall be dry with no precipitation, snowfall, or other conditions;

b) The ambient temperature shall be between 5℃ and 42℃.

2.5.1.1.2 Requirements for Equipment

2.5.1.1.2.1 Requirements for Test Equipment for Touch Screen Effect

Use the installation fixture to fix the high-frame camera inside the vehicle, with the lens plane parallel to the touch screen, and make sure that the central control screen is completely within the camera's vision range.

2.5.1.1.3.2 Requirements for Test Equipment for Convenience of operation

a) Pixels of camera: ≥1.3MP

b) Sampling rate: ≥60Hz

c) Eye tracking accuracy: ≤0.5°

d) Focal length of camera: 4.5 mm-25 mm

e) Eyelid closure recognition accuracy: ±0.1cm

2.5.1.1.3 Test Preparation

2.5.1.1.3.1 Initialization of System

If necessary, the on-board computer system may be initialized before the test, such as calibration of sensors such as touch screen.

2.5.1.1.3.2 Requirements for Vehicle Status

a) The tested vehicle shall be a new vehicle, with the travelled distance of no more than 5,000km;

b) After the vehicle is started, all functions of on-board system shall work normally, including but not limited to: the GPS, radio, Bluetooth, WiFi, and antenna shall work normally; the buttons on steering wheel shall work normally; the radar shall work normally; and the touch control of central control screen shall be normal.

2.5.1.1.3.3 Function Check

Before the start of the test, carry out one test based on the triggering conditions of each function included in the on-board touch interaction system, so as to ensure that each function works normally.

2.5.1.1.3.4 Preparation for Touch Interaction Test

a) Adjust the driver's seat of the vehicle to the appropriate position before the test;

b) Provide the mobile Internet services required by the system, with the on-board network system in an active state and maintained connectivity during the test;

c) Prepare a smart phone with Bluetooth function before the test, which stores at least 200 contact persons and 50 call records internally;

d) After each touch interaction test, turn off the engine, confirm that the power supply is cut off, and make sure that the system has completely exited.

2.5.1.1.3.5 Preparation for Mobile Interconnection Test

Select one mobile phone with each of the mainstream operating systems (HarmonyOS, iOS, and Android) respectively as the test phones, and confirm that their Bluetooth function is normal.

The test phone with HarmonyOS shall be selected from the flagship phones released by Huawei in the past three years; the test phone with iOS shall be selected from the phones released by Apple in the past three years; the test phone with Android shall be selected from the flagship phones released by mainstream manufacturers such as Xiaomi, vivo, and OPPO in the past three years.

2.5.1.1.3.6 Test Shooting

a) Before installing the test equipment, take a photo of the tested vehicle at a 45° angle in the front left and take a photo of the vehicle's nameplate;

b) After installing the test equipment, take photos of the internal and external test equipment of the tested vehicle;

c) Place the audio and video recording equipment inside the tested vehicle, and record the test process.

2.5.1.1.4 Test Items

2.5.1.1.4.1 Touch Screen Effect

2.5.1.1.4.1.1 Display Scenario

(1) Pixel Density

Calculate the pixel density (Equation 2-5) based on the resolution and size of the vehicle's central control screen. Obtain the final PPI value by rounding off the tail.

$$\text{Pixel density (PPI)} = \sqrt{X^2 + Y^2}/Z \qquad (2\text{-}5)$$

In which: X is the pixels in length of the central control screen, Y is the pixels in width of the central control screen, and Z is the size of the central control screen (in inch).

(2) Luminance Adjustment

According to the vehicle manual, check the central control screen luminance adjustment method. For the vehicle with adaptive adjustment function, carry out verification by giving different lighting conditions to the screen.

2.5.1.1.4.1.2 Click Scenario -Turning on Local Functions

(1) Click Response Time

a) Answering Call

Start the tested vehicle, wait until the central control screen is fully activated, and then connect the mobile phone's Bluetooth. Without actively opening any application, use an auxiliary mobile phone to make a car Bluetooth phone call. When the central control screen displays the call information, click on the "answer button" with the stylus. When the screen becomes still, end the test. Record the time from the moment when the stylus leaves the screen to the moment when the call is put through and the

interface becomes stable.

Repeat the test for 5 times and take the average value as the click response time for answering call.

b) Entering A/C Interface

Start the tested vehicle, and wait until the central control screen is fully started. Without actively opening any application, use the stylus to click on the A/C icon on the screen. When the screen becomes still, end the test. Record the time from the moment when the stylus leaves the screen to the moment when the A/C screen is fully loaded.

Repeat the test 5 times and take the average value as the click response time for entering A/C interface.

2.5.1.1.4.1.3 Click Scenario -Turning on Connected Functions

(1) Click Response Time

a) Starting Navigation

Start the tested vehicle, and wait until the central control screen is fully started. Without actively opening any application, enter the pre-installed map navigation interface. Search for 1 location within the city and 1 location outside the city through the search box on the navigation interface, and set the route preference to the fastest (or other equivalent description such as time priority). Wait for the route calculation to be completed, click on the "start navigation" button on the screen with the stylus. When the screen becomes still, end the test. Record the time from the moment when the stylus leaves the screen to the moment when the navigation interface is fully loaded.

Intra-city navigation: The starting point is 15-20km away from the ending point, and the starting point and the ending point are located in the same city. For example, the starting point is China Automotive Technology and Research Center Co., Ltd., and the ending point is selected as Tianjin Railway Station. Repeat the test for 5 times and take the average value as the click response time for intra-city navigation.

Cross-city navigation: The starting point is 1,000-1,100km away from the ending point, and the starting point and the ending point are located in different cities. For example, the starting point is China Automotive Technology and Research Center Co., Ltd., and the ending point is selected as Shanghai Railway Station. Repeat the test for 5 times and take the average value as the click response time for cross-city navigation.

Take the average of intra-city navigation and cross-city navigation as the click response time for starting navigation.

b) Turn Up Music

Start the tested vehicle, and wait until the central control screen is fully started. Without actively opening any application, click on the pre-installed music icon with the stylus. When the screen becomes still, end the test. Record the time from the moment when the stylus leaves the screen to the moment when the music interface is loaded.

The number of pre-installed music applications in the on-board computer shall be counted as n, the score weight of each music shall be 100/n, and the final score shall be the score of each music × the sum of weights.

Carry out the test 5 times for each application, and take the average value as the click response time for “turn up the music” of such application.

c) Turn On Video

Start the tested vehicle, and wait until the central control screen is fully started. Without actively opening any application, click on the pre-installed video icon with the stylus. When the screen becomes still, end the test. Record the time from the moment when the stylus leaves the screen to the moment when the video screen is loaded.

The number of pre-installed video applications in the on-board computer shall be counted as n, the score weight of each video shall be 100/n, and the final score shall be the score of each video × the sum of weights

Carry out the test 5 times for each application, and take the average value as the click response time for “turn on the video” of such application.

2.5.1.1.4.1.4 Sliding Scenario -Sliding Local Functions

(1) Sliding Fluency

a) Sliding Contact List

Start the tested vehicle, wait until the central control screen is fully started, connect the mobile phone’s Bluetooth, wait until the contact list is updated, and then use a stylus to slide the contact list interface up and down separately. When sliding the list, take the first frame when the list begins to change as the start time of the test, and end the test when the list content no longer changes. Record the stuttering situation during the sliding process, and obtain the maximum successive frame stuttering count and their average frame rate for a single test. If the display mode of contact list on central control screen is horizontal, then slide the contact list left and right respectively.

Repeat the up sliding (or left sliding) and down sliding (or right sliding) tests 5 times, take the maximum value among the 10 test results as the final value of maximum successive frame stuttering count, and take the average value of 10 test results as the final value of average frame rate.

2.5.1.1.4.2 Convenience of operation

2.5.1.1.4.2.1 Continuous Interaction Scenario

Before the test, the test personnel shall start the tested vehicle. After the on-board computer system is fully started, the test personnel should use the corresponding operating functions according to the steps in Table 2-1 through touch screen, buttons or knobs, and determine the one execution method with minimum operating step. The operation shall be carried out 10 times, so as to make the test personnel fully familiar with the operating steps of A/C setting and radio tuning.

Then, the test personnel shall drive the tested vehicle onto a straight test road and stabilize the

speed at 50±5km/h. During the test, it is necessary to ensure that the tested vehicle does not deviate from the lane line. The test personnel shall perform A/C setting and radio tuning operations according to the confirmed execution methods and steps in Table 2-1. During the execution of interaction tasks, the maximum time of sight off road (T_{max}), total time of sight off road (T_{sum}), and number of steps (N) shall be tested using an eye tracker. Carry out the A/C setting test and radio tuning test 3 times and take the average value.

Table 2-1 Operation Steps for Continuous Interaction Scenario

Interaction Task	No.	Operation Steps
A/C setting	1	Turn on the A/C
	2	Set the temperature to 26℃ (using the lowest designed temperature of the A/C as the starting point for adjustment)
	3	Set the air volume to medium (using the minimum designed air volume of the A/C as the starting point for adjustment)
	4	Turn off the air conditioner

Table 2-1 Operation Steps for Continuous Interaction Scenario (Continued)

Interaction Task	No.	Operation Steps
Radio tuning	1	Turn on the radio
	2	Tune to FM 106.8 (Before the test, store five channel labels containing FM106.8 During the test, complete the tuning by clicking on the stored label or button switch on the touch screen (The score shall be given based on the maximum possible number of switches))
	3	Adjust to sound volume to medium (using the lowest designed sound volume of the radio as the starting point for adjustment)
	4	Turn off the radio

2.5.1.1.4.3 Mobile Interconnection

2.5.1.1.4.3.1 Bluetooth Connection

(1) Bluetooth reconnection Success Rate

Select three mobile phones each with one of the mainstream operating systems (iOS, Android, and HarmonyOS) in the past three years as test phones. The Bluetooth on the tested vehicle shall be turned on and paired and connected with the test phone. The test personnel shall leave the tested vehicle with the test phone and lock (turn off) the vehicle. After confirming that the Bluetooth of the test phone is disconnected from the Bluetooth of the vehicle, the test personnel shall stay away from the tested vehicle and return, start the vehicle, wait for 30 seconds, and observe whether the Bluetooth of the mobile phone and the vehicle is automatically reconnected. Carry out the test 20 times for each test phone and calculate the Bluetooth reconnection success rate.

2.5.1.1.4.3.2 Wifi Connection

(1) Mobile Wifi Connection

According to the vehicle manual, check whether the vehicle has the mobile WiFi connection function, and verify the function through actual operation.

2.5.1.1.4.3.3 Mobile Screen Projection

(1) Mobile screen mirroring

According to the vehicle manual, check whether the vehicle has the mobile connection mapping products such as CarPlay, Android Auto, CarLife and HiCar, and verify the function through actual operation.

(2) Cross Screen Interconnection

According to the vehicle manual, check whether the vehicle supports the cross screen interconnection (such as seamless flow, and unbounded interconnection), and verify the function through actual operation.

2.5.1.2 Voice Interaction

2.5.1.2.1 Test Conditions

2.5.1.2.1.1 Network Conditions

The mobile Internet services required for the voice interaction system to be tested shall be ensured. As for network conditions, the uplink bandwidth shall be no less than 200kbit/s, the downlink bandwidth shall be no less than 100kbit/s, the network latency shall be less than 100ms, and the stable connection state shall be maintained.

2.5.1.2.1.2 Environmental Conditions

The test shall be conducted in a quiet environment. The background noise level inside the vehicle shall comply with NC30 and is not greater than -64dBPa(A) The NC standard curve shall be as shown in Figure 2-5.

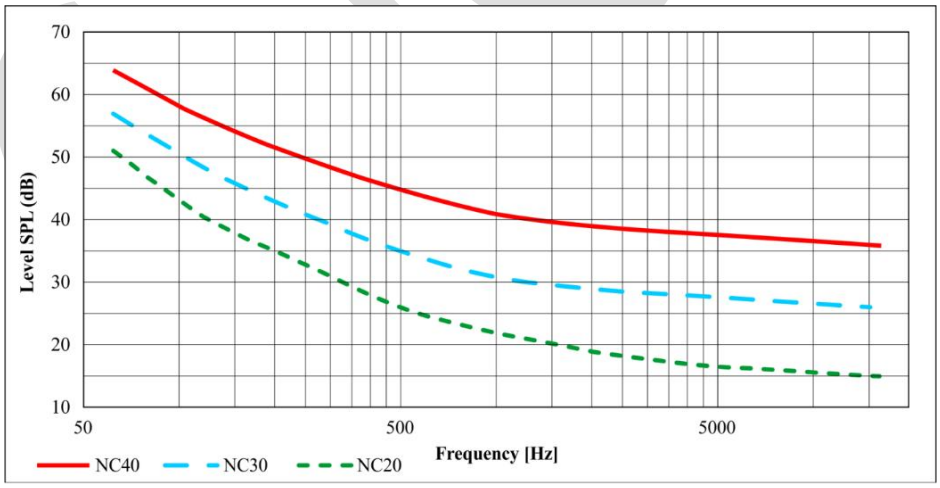

Figure 2-5 NC Standard Curve

2.5.1.2.2 Requirements for Equipment

2.5.1.2.2.1 Head and Torso Simulator (HATS)

The simulation mouth of HATS shall comply with the regulations of [ITU-T P.58] and shall be calibrated and equalized at MRP according to [ITU-T P.340]. During the equalization, the measured

power spectral density of the reference signal and the source signal shall be compared, so as to obtain the compensation curve. The average sound pressure at MRP shall be -1.7dBPa (typical average speech level).

When carrying out the noise test for vehicle, the impact of noise shall be taken into account. Due to the Lombard effect, the output level of simulation mouth will increase. When the long-term A-weighted noise level is greater than 50dB(A), for every 10dB increase in noise level, the output level will be increases by 3dB. The specific relationship is shown in Equation (2-6):

$$I(N) = \begin{cases} 0 & for \quad N < 50 \\ 0.3 \times (N - 50) & for \quad 50 < N \leq 77 \\ 8.0 & for \quad N > 77 \end{cases} \tag{2-6}$$

In which: I is the increased value of output level of simulation mouth; and N is the long-term A-weighted noise level near the driver's head.

2.5.1.2.2.2 Recording Microphone

Before the recording, the recording microphone shall be calibrated for sound.

2.5.1.2.2.3 High-Frame Camera

The high-frame camera shall have the audio and video recording capabilities, with a frame rate of at least 120fps.

2.5.1.2.3 Test Preparation

2.5.1.2.3.1 Noise Acquisition

2.5.1.2.3.1.1 Environmental Requirements

a) Weather conditions: The weather shall be clear and clear, without hail, rain, snow, wind and other meteorological conditions which may affect the noise recording.

b) Road conditions: The vehicle shall run on a straight and dry asphalt road, which shall be free of joints, unevenness or similar surface structures, and free of debris such as snow, dirt, stones and leaves.

2.5.1.2.3.1.2 Requirements for Noise Acquisition

a) Vehicle Load: During the noise recording, there shall no other loads on the vehicle except for the driver, noise recording personnel and necessary test equipment, and the occupants on the vehicle shall not make any noise.

b) Vehicle Status: The tyre model shall be the ex-factory model, with no obvious wear or eccentric wear on the pattern. The cold inflation pressure of the tyres shall comply with the technical requirements of the vehicle. The tested vehicle shall be in normal conditions.

c) The number of recording microphones shall be equal to the total number of hands-free microphones in the vehicle. The recording microphone shall be placed near each on-board hands-free microphone. Attention shall be paid to the installation method of recording microphones, so as to ensure that they will not be affected by vehicle vibration.

d) Before the recording, the tested vehicle shall run at a moderate speed for a distance of 1km; the A/C shall be set at 23℃, and the air volume shall be set to the mid range. Thirty minutes after the running, when the recording of noise begins, the engine shall be stable within the normal operating temperature range; the doors and windows of the vehicle shall be closed.

e) During the recording of noise, the highest gear corresponding to the vehicle speed shall be adopted (for manual transmission vehicle), or the gear shall not be changed manually (for automatic transmission vehicle). There shall be no sound from wipers or turn signals. The automatic A/C or automatic sound generating devices and other devices that may affect the test shall be in automatic operation.

2.5.1.2.3.1.3 Typical Noise Scenario

The typical noise scenarios to be acquired for tested vehicle are shown in Table 2-2.

Table 2-2 Typical Noise Scenario

No.	Vehicle Speed	Setting of A/C, Doors and Windows
Scenario 1	60km/h	1) The A/C is turned on and set to 23 degrees; 2) The air volume is set to mid range; 3) The external circulation mode is adopted; 4) Only the face blowing air duct is opened, while the other air ducts are closed; 5) The orientation of air outlets is adjusted to the middle angle between the horizontal and vertical angles; 6) All doors and windows are closed.
Scenario 2	120km/h or maximum design speed of vehicle	

2.5.1.2.3.2 Recording of Voice Wakeup Command Word

If the vehicle supports voice wakeup, it is necessary to record the default voice wakeup command word for the voice interaction system; if the vehicle only supports Button wakeup, it is unnecessary to record the voice wakeup command word.

Requirements for Corpus Recording Personnel:

The Mandarin proficiency level of recording personnel shall be Level-II or above. The recording personnel shall have clear speech, good language sense, reasonable sentence breaks, and natural and fluent pronunciation, and shall have no stuttering. Priority will be given to the personnel with driving experience and knowledge about on-board voice interaction system (or training).

Requirements for Corpus Recording:

a) The normal speech speed shall be maintained during recording.

The habit of speaking shall be consistent with daily use, the corpus shall be spoken naturally through retelling, the rigidity shall be avoided, and the phenomenon of reading text aloud shall be avoided.

b) The audio shall be free of raised noise (external noise).

2.5.1.2.3.3 Preparation of Vehicle

a) Vehicle load: There shall be no other loads on the vehicle except for test personnel and

necessary test equipment.

b) Vehicle settings: All doors and windows shall be closed. The adjustable seats shall be adjusted to the middle of the horizontal and vertical positions, and their backrests shall be as vertical as possible. The wipers and turn signals shall be in a non working state, and the automatic sound generation device and other devices that may affect the test shall be in a non working state. The on-board voice interaction system shall be connected and the volume shall be adjusted to a moderate level. The personalized identification list (such as contact list and music information list) that the test relies on shall be uploaded to the tested on-board voice interaction system. If the on-board voice interaction system will obtain the personalized identification list through a Bluetooth-connected mobile phone, a mobile phone corresponding to the Bluetooth version of the vehicle shall be prepared and the personalized identification list that the test relies on shall be uploaded to the mobile phone. The sound volume, media volume, and navigation volume of the voice interaction system shall be set to the middle level.

2.5.1.2.3.4 Test Equipment and Environment Setup

The test equipment shall be connected and placed are shown in Figure 2-6.

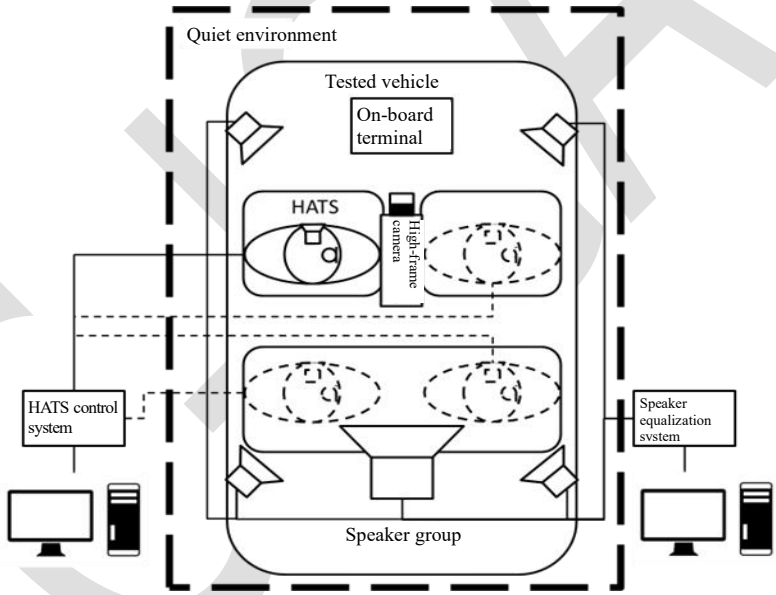

Figure 2-6 Connection of Test Equipment

During the test, the tested vehicle shall have its engine turned off and parked in a quiet environment.

The adjustable seats shall be adjusted to the middle of the horizontal and vertical positions, and their backrests shall be as vertical as possible.

The high-frame camera shall be facing the vehicle's central control screen and the images on the central control screen shall be fully and clearly recorded.

The speakers shall be carefully positioned to reduce the interference in the transmission path among the speakers, hands-free microphone, and HATS, and the speakers shall not produce resonance.

2.5.1.2.3.5 Background Noise Playback Method

During the test, use the full-frequency speakers (in the number which is greater than the number of on-board microphones) and one bass speaker to replay the typical background noise scenario inside the vehicle.

The speaker group shall be balanced so that the reproduced sound field level of each recording microphone shall be within ±1dB. in the range of 100-1000Hz, the amplitude of complex coherence (normalized cross-correlation spectrum) shall be greater than 0.9 (measured at 1/3 Octave band). The phase of complex coherence shall be accurate to ±10 degrees in the range of 100-1000kHz, and ±30 degrees in the range of 1-1.5kHz (measured at 1/3 Octave band). The difference between the original reference noise amplitude spectrum and the analog noise amplitude spectrum (both in dB) of each recording microphone shall be within ±3dB at 50-10000Hz and ±6dB at 10-16000Hz (measured at 1/3 Octave band). From 50-20000Hz, the average spectral accuracy of all recording microphones shall be within ±3dB.

2.5.1.2.4 Test Items

2.5.1.2.4.1 Wakeup Ability

2.5.1.2.4.1.1 Voice Wakeup - Wakeup Without Noise

(1) Wakeup Success Rate

When the vehicle is stationary, set the tested on-board voice interaction system to the standby state, place the HATS on the driver's seat according to Section 2.5.1.2.3.4 hereof, use the HATS to play the default voice wakeup command word for the tested voice interaction system, and carry out the wakeup operation by means of voice wakeup. Carry out the test 50 times (with 5 male recording persons and 5 female recording persons, 5 audio recordings per person), record the number of successful wakeups based on the feedback from on-board voice interaction system, and calculate the wakeup rate according to Equation (2-7).

$$\text{Wakeup success rate} = \frac{\text{Number of successful wakeups}}{50} \times 100\% \qquad (2\text{-}7)$$

(2) Wakeup Delay

When the vehicle is stationary, set the tested on-board voice interaction system to the standby state, place the HATS on the driver's seat according to Section 2.5.1.2.3.4 hereof, use the HATS to play the default voice wakeup command word for the tested voice interaction system, and carry out the wakeup operation by means of voice wakeup. Carry out the test 50 times (with 5 male recording persons and 5 female recording persons, 5 audio recordings per person), record the wakeup delay based on the response of on-board voice interaction system, and calculate the average value of wakeup delay.

2.5.1.2.4.1.2 Voice Wakeup - Wakeup with Noise

(1) Wakeup Success Rate

a) Typical Noise Scenario (60Km/H)

Replay the typical scenario noise (60km/h) acquired in Section 2.5.1.2.3.1.3 for reconstruction of typical noise scenario, set the tested on-board voice interaction system to the standby state, place the HATS on the driver's seat according to Section 2.5.1.2.3.4 hereof, use the HATS to play the default voice wakeup command word for the tested voice interaction system, and carry out the wakeup operation by means of voice wakeup. Carry out the test 50 times (with 5 male recording persons and 5 female recording persons, 5 audio recordings per person), record the number of successful wakeups based on the feedback from on-board voice interaction system, and calculate the wakeup success rate according to Equation (2-8).

$$\text{Wakeup success rate} = \frac{\text{Number of successful wakeups}}{50} \times 100\% \quad (2\text{-}8)$$

b) Typical Noise Scenario (120 Km/H or Maximum Design Speed Of Vehicle)

Replay the typical scenario noise (120 km/h or maximum design speed of vehicle) acquired in Section 2.5.1.2.3.1.3 for reconstruction of typical noise scenario, set the tested on-board voice interaction system to the standby state, place the HATS on the driver's seat according to Section 2.5.1.2.3.4 hereof, use the HATS to play the default voice wakeup command word for the tested voice interaction system, and carry out the wakeup operation by means of voice wakeup. Carry out the test 50 times (with 5 male recording persons and 5 female recording persons, 5 audio recordings per person), record the number of successful wakeups based on the feedback from on-board voice interaction system, and calculate the wakeup success rate according to Equation 2-9.

$$\text{Wakeup success rate} = \frac{\text{Number of successful wakeups}}{50} \times 100\% \quad (2\text{-}9)$$

2.5.1.2.4.1.3 Voice Wakeup - Wakeup with Noise and Background Sound

(1) Wakeup Success Rate

a) Typical Noise Scenario (60Km/H)

Replay the typical scenario noise (60km/h) acquired in Section 2.5.1.2.3.1.3 for reconstruction of typical noise scenario, set the tested on-board voice interaction system to the standby state, place the HATS on the driver's seat according to Section 2.5.1.2.3.4 hereof, make the on-board voice interaction system in an interactive response state, use the HATS to play the default voice wakeup command word for the tested voice interaction system, and carry out the wakeup operation by means of voice wakeup. Carry out the test 50 times (with 5 male recording persons and 5 female recording persons, 5 audio recordings per person), record the number of successful wakeups based on the feedback from on-board voice interaction system, and calculate the wakeup success rate according to Equation (2-10).

$$\text{Wakeup success rate} = \frac{\text{Number of successful wakeups}}{50} \times 100\% \quad (2\text{-}10)$$

b) Typical Noise Scenario (120Km/H or Maximum Design Speed of Vehicle)

Replay the typical scenario noise (120km/h or maximum design speed of vehicle) acquired in Section 2.5.1.2.3.1.3 for reconstruction of typical noise scenario, set the tested on-board voice

interaction system to the standby state, place the HATS on the driver's seat according to Section 2.5.1.2.3.4 hereof, make the on-board voice interaction system in an interactive response state, use the HATS to play the default voice wakeup command word for the tested voice interaction system, and carry out the wakeup operation by means of voice wakeup. Carry out the test 50 times (with 5 male recording persons and 5 female recording persons, 5 audio recordings per person), record the number of successful wakeups based on the feedback from on-board voice interaction system, and calculate the wakeup success rate according to Equation (2-11).

$$\text{Wakeup success rate} = \frac{\text{Number of successful wakeups}}{50} \times 100\% \quad (2\text{-}11)$$

2.5.1.2.4.1.4 Voice Wakeup - Wakeup free

(1) Wakeup Success Rate

When the vehicle is stationary, turn on the wakeup-disenabled function of on-board voice interaction system, set the tested on-board voice interaction system to the standby state, place the HATS on the driver's seat according to Section 2.5.1.2.3.4 hereof, and then use the HATS to play the test corpus for voice wakeup - Wakeup free as specified in Section 1 of Appendix 1. Carry out the test 10 times (with 1 male recording person and 1 female recording person, 5 audio recordings per person), record the number of successful voice interactions based on the response of on-board voice interaction system, and calculate the wakeup success rate according to Equation (2-12).

$$\text{Wakeup success rate} = \frac{\text{Number of successful wakeups}}{10} \times 100\% \quad (2\text{-}12)$$

2.5.1.2.4.1.5 Voice Wakeup - Outside Wakeup

(1) Wakeup Success Rate

When the vehicle is stationary, close all doors and windows, set the tested on-board voice interaction system to the standby state, place the HATS outside the vehicle near the driver’s seat, place the artificial mouth vertically facing the center of the driver's seat window, with the mouth 50cm away from the driver's seat window, and perform the wakeup operation by means of voice wakeup (1 male test person and 1 female test person, 10 times per person), Carry out the test 20 times, record the number of successful wakeups based on the feedback from on-board voice interaction system, and calculate the wakeup rate according to Equation (2-13).

$$\text{Wakeup success rate} = \frac{\text{Number of successful wakeups}}{20} \times 100\% \quad (2\text{-}13)$$

2.5.1.2.4.1.6 Button Wakeup

(1) Wakeup Success Rate

When the vehicle is stationary, set the tested on-board voice interaction system to the standby state, and perform a wake-up operation by means of button wakeup. Carry out the test 50 times with a 2s interval, record the number of successful wakeups based on the feedback from on-board voice interaction system, and calculate the wakeup rate according to Equation (2-14).

$$\text{Wakeup success rate} = \frac{\text{Number of successful wakeups}}{50} \times 100\% \quad (2\text{-}14)$$

2.5.1.2.4.2 Interaction Ability

2.5.1.2.4.2.1 Driver'S Seat - Without Noise - Basic Corpus Interaction

(1) Interaction Success Rate

a) Standard-Mandarin Interaction Success Rate

When the vehicle is stationary, set the tested on-board voice interaction system to the standby state, place the HATS on the driver's seat according to Section 2.5.1.2.3.4 hereof, and then use the HATS to play the standard-Mandarin test corpus specified in Section 2.1 of Appendix 1 hereof. Carry out the test 600 times for each dialect (with 5 male recording persons and 5 female recording persons, 60 audio recordings per person), record the number of successful voice interactions based on the response of on-board voice interaction system, and calculate the interaction success rate according to Equation (2-15).

$$\text{Interaction success rate} = \frac{\text{Number of successful voice interactions}}{600} \times 100\% \quad (2\text{-}15)$$

b) Dialect Interaction Success Rate

When the vehicle is stationary, set the tested on-board voice interaction system to the standby state, place the HATS on the driver's seat according to Section 2.5.1.2.3.4 hereof, and then use the HATS to play the dialect test corpus specified in Section 2.2 of Appendix 1 hereof. Carry out the test 20 times for each dialect (with 1 male recording person and 1 female recording person, 10 audio recordings per person), record the number of successful voice interactions based on the response of on-board voice interaction system, and calculate the interaction success rate for each dialect according to Equation (2-16).

$$\text{Interaction success rate} = \frac{\text{Number of successful voice interactions}}{20} \times 100\% \quad (2\text{-}16)$$

c) Regional-Accent Interaction Success Rate

When the vehicle is stationary, set the tested on-board voice interaction system to the standby state, place the HATS on the driver's seat according to Section 2.5.1.2.3.4 hereof, and then use the HATS to play the regional-accent test corpus specified in Section 2.3 of Appendix 1 hereof. Carry out the test 20 times for each regional accent (with 1 male recording person and 1 female recording person, 10 audio recordings per person), record the number of successful voice interactions based on the response of on-board voice interaction system, and calculate the interaction success rate for each regional accent according to Equation (2-17).

$$\text{Interaction success rate} = \frac{\text{Number of successful voice interactions}}{20} \times 100\% \quad (2\text{-}17)$$

(2) Interaction Response Delay

When the vehicle is stationary, set the tested on-board voice interaction system to the standby state,

place the HATS on the driver's seat according to Section 2.5.1.2.3.4 hereof, and then use the HATS to play the test corpus for interaction response delay specified in Section 2.4 of Appendix 1 hereof. Carry out the test 60 times (with 3 male recording persons and 3 female recording persons, 10 audio recordings per person), record the interaction response delay based on the response of on-board voice interaction system, and calculate the average value of 60 interaction response delays (if the voice interaction fails, its delay will not be counted).

2.5.1.2.4.2.2 Driver'S Seat -With Noise-Basic Corpus Interaction

(1) Interaction Success Rate

a) Typical Noise Scenario (60km/H)

Replay the typical scenario noise (60km/h) acquired in Section 2.5.1.2.3.1.3 for reconstruction of typical noise scenario, set the tested on-board voice interaction system to the standby state, place the HATS on the driver's seat according to Section 2.5.1.2.3.4 hereof, and then use the HATS to play the standard-Mandarin test corpus specified in Section 2.1 of Appendix 1 hereof. Carry out the test 600 times (with 5 male recording persons and 5 female recording persons, 60 audio recordings per person), record the number of successful voice interactions based on the response of on-board voice interaction system, and calculate the interaction success rate according to Equation (2-18).

$$\text{Interaction success rate} = \frac{\text{Number of successful voice interactions}}{600} \times 100\% \qquad (2\text{-}18)$$

b) Typical Noise Scenario (120km/H or Maximum Design Speed of Vehicle)

Replay the typical scenario noise (120km/h or maximum design speed of vehicle) acquired in Section 2.5.1.2.3.1.3 for reconstruction of typical noise scenario, set the tested on-board voice interaction system to the standby state, place the HATS on the driver's seat according to Section 2.5.1.2.3.4 hereof, and then use the HATS to play the standard-Mandarin test corpus specified in Section 2.1 of Appendix 1 hereof. Carry out the test 600 times (with 5 male recording persons and 5 female recording persons, 60 audio recordings per person), record the number of successful voice interactions based on the response of on-board voice interaction system, and calculate the interaction success rate according to Equation (2-19).

$$\text{Interaction success rate} = \frac{\text{Number of successful voice interactions}}{600} \times 100\% \qquad (2\text{-}19)$$

2.5.1.2.4.2.3 Driver'S Seat - Without Noise - Advanced Corpus Interaction

(1) Interaction Success Rate

a) Multiple Intentions In One Sentence

When the vehicle is stationary, set the tested on-board voice interaction system to the standby state, place the HATS on the driver's seat according to Section 2.5.1.2.3.4 hereof, and then use the HATS to play the test corpus for multiple intentions in one sentence as specified in Section 3.1 of Appendix 1. Carry out the test 10 times (with 1 male recording person and 1 female recording person, 5 audio recordings per person), record the number of successful voice interactions based on the response of

on-board voice interaction system, and calculate the interaction success rate according to Equation (2-20).

$$\text{Interaction success rate} = \frac{\text{Number of successful voice interactions}}{10} \times 100\% \qquad (2\text{-}20)$$

b) Multi-Round Interaction

When the vehicle is stationary, set the tested on-board voice interaction system to the standby state, place the HATS on the driver's seat according to Section 2.5.1.2.3.4 hereof, and then use the HATS to play the test corpus for multi-round interaction as specified in Section 3.2 of Appendix 1. Carry out the test 10 times (with 1 male recording person and 1 female recording person, 5 audio recordings per person), record the number of successful voice interactions based on the response of on-board voice interaction system, and calculate the interaction success rate according to Equation (2-21).

$$\text{Interaction success rate} = \frac{\text{Number of successful voice interactions}}{10} \times 100\% \qquad (2\text{-}21)$$

c) Semantic Comprehension

When the vehicle is stationary, set the tested on-board voice interaction system to the standby state, place the HATS on the driver's seat according to Section 2.5.1.2.3.4 hereof, and then use the HATS to play the test corpus for semantic comprehension as specified in Section 3.3 of Appendix 1. Carry out the test 10 times (with 1 male recording person and 1 female recording person, 5 audio recordings per person), record the number of successful voice interactions based on the response of on-board voice interaction system, and calculate the interaction success rate according to Equation (2-22).

$$\text{Interaction success rate} = \frac{\text{Number of successful voice interactions}}{10} \times 100\% \qquad (2\text{-}22)$$

d) Visible To Say

Before the test, save the contact list specified in Section 4.4.1 of Appendix 1 on the test phone.

When the vehicle is stationary, set the tested on-board voice interaction system to the standby state, adjust the on-board computer interface to the contact list interface, place the HATS on the driver's seat according to Section 2.5.1.2.3.4 hereof, and then use the HATS to play the test corpus for visible to say as specified in Section 3.4.2 of Appendix 1. Carry out the test 10 times (with 1 male recording person and 1 female recording person, 5 audio recordings per person), record the number of successful voice interactions based on the response of on-board voice interaction system, and calculate the interaction success rate according to Equation (2-23).

$$\text{Interaction success rate} = \frac{\text{Number of successful voice interactions}}{10} \times 100\% \qquad (2\text{-}23)$$

2.5.1.2.4.2.4 Driver'S Seat - Internet Disconnected - Basic Corpus Interaction

(1) Interaction Success Rate

When the vehicle is stationary, set the tested on-board voice interaction system to the standby state, place the HATS on the driver's seat according to Section 2.5.1.2.3.4 hereof, and then use the HATS to play the test corpus for driver's seat - Internet disconnected - basic corpus interaction as specified in

Section 4 of Appendix 1. Carry out the test 10 times (with 1 male recording person and 1 female recording person, 5 audio recordings per person), record the number of successful voice interactions based on the response of on-board voice interaction system, and calculate the interaction success rate according to Equation (2-24).

$$\text{Interaction success rate} = \frac{\text{Number of successful voice interactions}}{10} \times 100\% \qquad (2\text{-}24)$$

2.5.1.2.4.2.5 Passenger'S Seat - Without Noise - Basic Corpus Interaction

(1) Interaction Success Rate

a) Front Passenger's Seat

When the vehicle is stationary, set the tested on-board voice interaction system to the standby state, place the HATS on the front passenger's seat according to Section 2.5.1.2.3.4 hereof, and use the HATS to play the test corpus for front passenger's seat as specified in Section 5.1 of Appendix 1. Carry out the test 20 times for window control function and A/C control function respectively (with 1 male recording person and 1 female recording person, 5 audio recordings per person). If the tested on-board voice interaction system correctly executes the window or A/C related command given from the front passenger's seat, it is deemed that the current voice interaction is successful. Record the number of successful voice interactions based on the response of on-board voice interaction system, and calculate the interaction success rate according to Equation (2-25).

$$\text{Interaction success rate} = \frac{\text{Number of successful voice interactions}}{20} \times 100\% \qquad (2\text{-}25)$$

If the interaction success rate of window control or A/C control command for front passenger's seat is no less than 80%, the tested on-board voice interaction system shall be deemed as supporting the sound source localization of such function for front passenger's seat.

b) Rear Seats

When the vehicle is stationary, set the tested on-board voice interaction system to the standby state, place the HATS on different rear seats respectively according to Section 2.5.1.2.3.4 hereof, and then use the HATS to play the test corpus for rear seat as specified in Section 5.2 of Appendix 1. Carry out the test 20 times for each seat (with 1 male recording person and 1 female recording person, 5 audio recordings per person). If the tested on-board voice interaction system correctly executes the window related command given from the corresponding seat, it is deemed that the current voice interaction is successful. Record the number of successful voice interactions based on the response of on-board voice interaction system, and calculate the interaction success rate according to Equation (2-26).

$$\text{Interaction success rate} = \frac{\text{Number of successful voice interactions}}{20} \times 100\% \qquad (2\text{-}26)$$

If the interaction success rate of window control command for a certain rear seat is no less than 80%, the tested on-board voice interaction system shall be deemed as supporting the sound source localization of window control function for such seat.

2.5.1.3 Wireless Interaction

2.5.1.3.1 Test Conditions

The vehicle shall be parked in an open area with no other electromagnetic signal interference nearby, and the mobile Internet service required for the wireless interaction system to be tested shall be ensured. As for network conditions, the uplink bandwidth shall be no less than 200kbit/s, the downlink bandwidth shall be no less than 100kbit/s, and the stable connection state shall be maintained.

2.5.1.3.2 Test Preparation

a) The tested vehicle shall be a new vehicle, with the travelled distance of no more than 5,000km;

b) After the vehicle is started, all functions of on-board system shall work normally, including but not limited to: the GPS, radio, Bluetooth, WiFi, windows, skylight and A/C shall work normally;

c) Select one mobile phone with each of the mainstream operating systems (HarmonyOS, iOS, and Android) respectively as the test phone, download and install the corresponding latest version of the mobile vehicle control application from the application store, log into the owner's account (or authorized account) and obtain the relevant permissions.

Note: The test phone with HarmonyOS shall be selected from the flagship phones released by Huawei in the past three years; the test phone with iOS shall be selected from the phones released by Apple in the past three years; the test phone with Android shall be selected from the flagship phones released by mainstream manufacturers such as Xiaomi, vivo, and OPPO in the past three years.

2.5.1.3.2.1 Passive Keyless Entry

a) Turn on the vehicle's passive keyless entry function;

b) Create a mobile Bluetooth digital key (if any);

c) Turn on the Bluetooth switch for the mobile phone and the vehicle.

2.5.1.3.2.2 Bluetooth Key

a) Turn on the Bluetooth key function of the vehicle;

b) Turn on the Bluetooth switch for the mobile phone and the vehicle;

c) Turn off the cellular network on the mobile phone;

d) Turn off the vehicle's passive keyless entry function (if any).

2.5.1.3.2.3 NFC Unlocking

a) Bind the NFC key with card and mobile phone;

b) Turn on the vehicle’s NFC key function;

c) Turn on the NFC switch on the mobile phone and make sure that the mobile phone is in a power on and screen off state during the test;

d) Turn off the vehicle's passive keyless entry function (if any).

2.5.1.3.2.4 Face Recognition

a) Register and enter the face data of 2 people (if the face data capacity is 1, only the data of 1 person will be entered);

b) Turn on the vehicle's face recognition unlocking function.

2.5.1.3.3 Test Items

2.5.1.3.3.1 Application-Based Vehicle Control Ability

2.5.1.3.3.1.1 Vehicle State Display - Vehicle Location

Check whether the mobile vehicle control application has the function to display the location of vehicle.

2.5.1.3.3.1.2 Vehicle State Display - Doors and windows

Check whether the mobile vehicle control application has the function to display the state of doors and windows.

2.5.1.3.3.1.3 Vehicle State Display - Remaining Mileage Display

Check whether mobile vehicle control application has the function to display the remaining mileage.

2.5.1.3.3.1.4 Vehicle State Display - Tyre Pressure Display

Check whether mobile vehicle control application has the function to display the tyre pressure.

2.5.1.3.3.1.5 Primary Vehicle Control -Window Control

(1) Vehicle Control Success Rate

When the windows of the tested vehicle are closed, the vehicle is locked, and the interior display screen is off, the test personnel will use the mobile vehicle control application to test the window control function and observe the response of the vehicle and mobile application at a distance of more than 50m away from the vehicle.

The test personnel will click on the window opening icon on the mobile vehicle control application. After the windows are opened and the mobile vehicle control application indicates that the windows have been successfully opened, the test personnel will click on the window closing icon on the mobile vehicle control application, and observe the response of the vehicle and mobile application. If the vehicle can fully execute the window opening/closing function command, and the mobile vehicle control application can correctly indicate the completion of command, a successful remote window control operation will be counted. If the vehicle or mobile application fails to respond successfully within 30s after the window control command is issued the mobile vehicle control application, a failure of remote window control operation will be counted.

Carry out the test 10 times with each of 3 test mobile phones, record the number of successful executions of window control command, and calculate the vehicle control success rate of window control according to Equation (2-27).

$$\text{Vehicle control success rate} = \frac{\text{Number of successful vehicle controls}}{30} \times 100\% \quad (2\text{-}27)$$

2.5.1.3.3.1.6 Primary Vehicle Control - A/C Control

(1) Vehicle Control Success Rate

When the A/C on the tested vehicle is turned off, the vehicle is locked, and the interior display screen is off, the test personnel will use the mobile vehicle control application to test the A/C control function and observe the response of the vehicle and mobile application at a distance of more than 50m away from the vehicle.

The test personnel will click on the icon for turning on A/C icon on the mobile vehicle control application. After the vehicle turns on the A/C and the mobile vehicle control application indicates that the A/C has been successfully turned on, the test personnel will click on the icon for turning off A/C on the mobile vehicle control application, and observe the response of the vehicle and mobile application. If the vehicle can fully execute the A/C on/off function command, and the mobile vehicle control application can correctly indicate the completion of command, a successful remote A/C control operation will be counted. If the vehicle or mobile application fails to respond successfully within 30s after the A/C control command is issued the mobile vehicle control application, a failure of remote A/C control operation will be counted.

Carry out the test 10 times with each of 3 test mobile phones, record the number of successful executions of A/C control command, and calculate the vehicle control success rate of A/C control according to Equation (2-28).

$$\text{Vehicle control success rate} = \frac{\text{Number of successful vehicle controls}}{30} \times 100\% \quad (2\text{-}28)$$

2.5.1.3.3.1.7 Advanced Vehicle Control - Intelligent Vehicle Search

(1) Vehicle Control Success Rate

When the windows of the tested vehicle are closed and the A/C, the tested vehicle is turned off, the vehicle is locked, and the interior display screen is off, the test personnel will use the mobile vehicle control application to test the intelligent vehicle search function, and observe the response of the vehicle and mobile application at a distance of more than 50m away from the vehicle.

The test personnel will click on the vehicle search (whistle or flashing light) icon on the vehicle control application on the mobile phone. If there is a response of whistle or flashing light on the vehicle that can indicate the vehicle location, and the vehicle control application on the mobile phone can correctly indicate the completion of the command, a successful execution of intelligent vehicle search operation will be counted. If the vehicle or mobile application fails to respond successfully within 30s after the search command is issued by the mobile vehicle control application, a failure of search operation will be counted.

Carry out the test 10 times with each of 3 test mobile phones, record the number of successful executions of intelligent vehicle search, and calculate the vehicle control success rate of intelligent

vehicle search according to Equation (2-29).

$$\text{Vehicle control success rate} = \frac{\text{Number of successful vehicle controls}}{30} \times 100\% \quad (2\text{-}29)$$

2.5.1.3.3.2 Intelligent Unlocking Ability

2.5.1.3.3.2.1 Keyless Unlocking - Application-Based Remote Unlocking

(1) Unlocking Success Rate

The test personnel will click on the door unlocking icon on the mobile vehicle control application. After the vehicle completes the unlocking operation and the mobile vehicle control application indicates the unlocking of door, the test personnel will click on the door locking icon on the mobile vehicle control application and observe the response of the vehicle and mobile vehicle control application to the vehicle locking command. If the vehicle can fully execute the door unlocking and locking function commands, a successful execution of application-based remote unlocking command will be counted. If the vehicle or mobile application fails to respond successfully within 30s after the door lock control command is issued on the mobile vehicle control application, a failure of remote door lock control operation will be counted.

Carry out the test 10 times with each of 3 test mobile phones, record the number of successful executions of application-based remote unlocking command, and calculate the unlocking success rate of application-based remote unlocking according to Equation (2-30).

$$\text{Unlocking success rate} = \frac{\text{Number of successful unlockings}}{30} \times 100\% \quad (2\text{-}30)$$

2.5.1.3.3.2.2 Keyless Unlocking - Passive Keyless Entry

(1) Unlocking Success Rate

After the tested vehicle is locked, the test personnel carrying a physical key and three mobile keys respectively will approach a door of the tested vehicle from a distance away from the vehicle (with a distance of no less than 50 meters between the vehicle and the person), or presses the unlocking trigger button on the door handle, so as to check whether the vehicle can be successfully unlocked; the test personnel carrying key will go away from the vehicle, or press the locking trigger button on the door handle, so as to check whether the vehicle can be successfully locked. If the vehicle can completely execute the unlocking and locking function commands, a successful execution of passive keyless entry command will be counted. Carry out the test 5 times for driver's door, front passenger's door and trunk with each type of key, record the number of successful executions of passive keyless entry function command, and respectively calculate the unlocking success rate of physical key and three mobile keys according to Equation (2-31).

$$\text{Unlocking success rate} = \frac{\text{Number of successful unlockings}}{15} \times 100\% \quad (2\text{-}31)$$

2.5.1.3.3.2.3 Keyless Unlocking - Bluetooth Key

(1) Unlocking Success Rate

After the tested vehicle is locked, the test personnel carrying three mobile phones equipped with Bluetooth key will get into the Bluetooth key sensing range of the vehicle, use the mobile vehicle control application to perform vehicle unlocking and locking operations, and check whether the vehicle can successfully execute the vehicle unlocking and locking commands. If the vehicle can fully execute the vehicle unlocking and locking function commands, a successful execution of Bluetooth key command will be counted. Carry out the test 10 times for each type of key, record the number of successful executions of Bluetooth key unlocking command, and calculate the unlocking success rate of Bluetooth key according to Equation (2-32).

$$\text{Unlocking success rate} = \frac{\text{Number of successful unlockings}}{30} \times 100\% \tag{2-32}$$

2.5.1.3.3.2.4 Keyless Unlocking – NFC Unlocking

(1) Unlocking Success Rate

After the tested vehicle is locked, the test personnel carrying the NFC card key and three mobile keys bound to NFC key respectively will approach the vehicle's NFC unlocking sensing area and check whether the vehicle can be successfully unlocked; the test personnel will close again to the vehicle's NFC unlocking sensing area and check whether the vehicle can be successfully locked. If the vehicle can completely execute the door unlocking and locking function commands, a successful execution of NFC unlocking command will be counted. Carry out the test 10 times for each type of key, record the number of successful executions of NFC unlocking command, and calculate the unlocking success rate of NFC card key and three mobile NFC keys respectively according to Equation (2-33).

$$\text{Unlocking success rate} = \frac{\text{Number of successful unlockings}}{10} \times 100\% \tag{2-33}$$

2.5.1.3.3.2.5 Biometric Recognition - Face Recognition

(1) Unlocking Success Rate

After the tested vehicle is locked, the test personnel will approach the vehicle's face recognition function sensing area with their face, so as to check whether the vehicle can be successfully unlocked. If the vehicle can execute the vehicle unlocking function command, a successful execution of face recognition unlocking command will be counted. Each test person with his/her face registered will carry out the test 10 times (if the face data capacity is 1, then such test person shall carry out the test 20 times), record the number of successful executions of face recognition unlock command, and calculate the unlocking success rate of face recognition unlocking function according to Equations (2-34).

$$\text{Unlocking success rate} = \frac{\text{Number of successful unlockings}}{20} \times 100\% \tag{2-34}$$

2.5.2 Intelligent Escort

2.5.2.1 Intelligent Vision Expansion

2.5.2.1.1 Around View Monitoring

2.5.2.1.1.1 Test Conditions

2.5.2.1.1.1.1 Test Site Conditions

The ambient temperature range of the test site shall be -20℃ to 45℃, and the horizontal visibility shall be not less than 1km.

2.5.2.1.1.1.2 Lighting Conditions for Test

a) Lighting conditions for realistic zoom

In the test, the light on the roof and rear portion of tested vehicle shall be uniform and consistent, and the illumination of roof shall not be less than 7,000lx.

b) Lighting conditions for splicing quality

In the test, the ambient lamp shall cover the splicing vision range of the system, and shall be evenly distributed. The ambient lamp illumination shall not be less than 200lx, and shall not exceed 100,000lx.

2.5.2.1.1.2 Requirements for Equipment

2.5.2.1.1.2.1 General Requirements

The optical measuring instrument shall be a first-class luminance meter specified in the national calibration regulations, and the mechanical device for reproducing the eye point position shall ensure that the positioning deviation in each direction is not more than 5mm.

2.5.2.1.1.2.2 Realistic Zoom

In the test, the reference position for view acquisition shall comply with the following requirements:

a) The forward-looking eye midpoint (M_f) is 635mm vertically above the H-point and 96mm behind the H-point.

b) The center of head/neck joint (J) is located 100mm behind M_f and 588mm vertically above the H-point

c) Draw an imaginary horizontal line between M_f and a point perpendicular to and above J, and defined it as J_2.

d) Rotate the imaginary line around J_2 in the direction of the rear view image until the linear distance between M_f and the center of view image reaches the minimum value.

e) Define the new rotated position of M_f as M_r (rotated eye midpoint).

f) Place the imaging point of the test equipment at M_r and point the lens towards the center of the view image.

Note: The coordinate information of H-point of 50% male drivers needs to be provided by the manufacturer. If the manufacturer does not provide the relevant coordinates, the relative coordinates of the H-point of 50% drivers need to be

obtained through test and calculation by using the HPM dummy device.

2.5.2.1.1.2.3 Splicing Quality

Cover a chessboard card with uniform cell size around the tested vehicle, and make sure that the chessboard covers the around view monitoring vision area of tested vehicle. The boundary line of cells on chessboard card shall be parallel or perpendicular to the boundary line of vehicle body, and its included angle shall not exceed 5°. Start the vehicle, activate the around view monitoring system, adjust the steering wheel angle to 0°, and use an image acquisition device to acquire the planar spliced view image of the display end of the around view monitoring system. The shooting direction of the image acquisition device shall be parallel to the normal of the display end. The planar spliced view image acquired by the image acquisition device shall have no obvious defect such as overexposure, darkness, and unclear portion.

2.5.2.1.1.3 Preparation of Tested Vehicle

a) Tyres: Check and adjust the pressure of each tyre to the pressure value specified by the vehicle manufacturer for half-loaded vehicle;

b) Vehicle Load: The load shall include the curb weight of the tested vehicle and the weight of the driver and one front passenger (75kg each);

c) Adjustable Suspension: If the vehicle is equipped with an adjustable suspension system, it shall be properly set that the height of the vehicle is the standard height;

a) Doors and Windows: All doors and windows of the vehicle are in a closed state, and the wiring harness of equipment is only allowed to be connected to external equipment through a separate rear window of the vehicle.

2.5.2.1.1.4 Test Items

2.5.2.1.1.4.1 Daytime Reverse Scenario

(1) Activation Time

a) As shown in Figure 2-7, set up the test system composed of light source, press-type sensitive switch/photoelectric switch, light sensor, and oscilloscope. The light source shall be a D50 surface light source, and the emitting surface of the light source shall be filled as much as possible with the AVMS default single view of the tested vehicle;

b) Lock and park the tested vehicle on a flat surface at room temperature for at least 30min, ensuring that all electronic systems of the tested vehicle have been deactivated, and have the test personnel unlock the tested vehicle;

c) Start the tested vehicle and activate the power system. Wait for at least 6s, adjust the tested vehicle to reverse gear to synchronously activate the AVMS and press-type sensitive switch/photoelectric switch, and record the time as t_1;

d) When the white-exposure-state image of the default single view appears on the monitor screen, record the time as t_2. As a result, the activation time is the difference between t_2 and t_1.

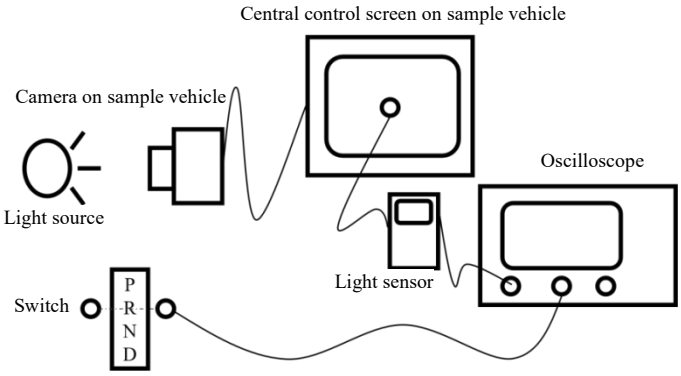

Figure 2-7 Test Layout Diagram for Activation Time

(2) Realistic Zoom

a) Arrange the regular cylinders with the height of 0.8m and the outer diameter of 0.3m as shown in Figure 2-8 at three positions G, H and I behind the tested vehicle;

b) Measure the actual distance a_{eye} from M_r to the center point of the view image;

c) Acquire and record the view images under the illumination conditions of realistic zoom;

d) Calculate the reference object angles for positions G, H and I as shown in Equation (2-35):

$$\theta_i = 60sin^{-1}\left(\frac{d}{a_{eye}}\right) \tag{2-35}$$

In which: d is the width of a single cylindrical reference object in the view image;

e) Symmetrically transfer the reference objects at positions G, H and I to the front of the tested vehicle and repeat the above test.

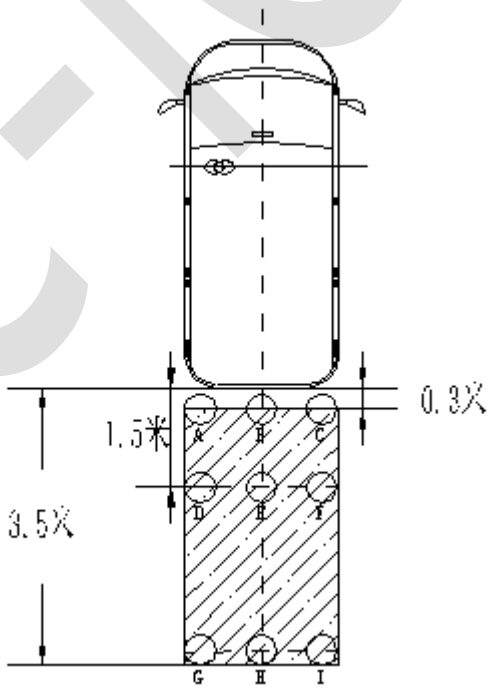

Figure 2-8 Test Layout Diagram for Realistic Zoom

(3) Observation Angle

The test personnel shall carry out verification by consulting the user manual of the tested vehicle and actually operating the tested vehicle.

The operation of tested vehicle is mainly aimed at the operable interface on the AVMS display end of the tested vehicle. On this interface, click on the relevant driver buttons of the AVMS view or drag the AVMS spliced view.

(4) Splicing Quality

a) Splicing Gap

Identify the splicing gaps existing in the acquired planar spliced view.

b) Splicing Dislocation

Identify the splicing dislocation existing in the acquired planar spliced view, and calculate the size of individual splicing dislocation as shown in Equations (2-36):

$$L_{di} = a_f \times \frac{\sqrt{\Delta x_i^{\ 2} + \Delta y_i^{\ 2}}}{a} \quad (2\text{-}36)$$

In which:

L_{di} - Actual length of a splicing location in spliced view;

Δx_i - Amount of misalignment in the *x*-direction of a splicing location in spliced view;

Δy_i - Amount of misalignment in the *y*-direction of a splicing location in spliced view;

a_f - Edge length of a cell in checkerboard card;

a - On-image edge length of a cell in checkerboard card.

c) Splicing Ghosting

Identify the splicing ghosting existing in the acquired planar spliced view. A black cell with a grayscale no greater than 20% of the grayscale range within the checkerboard area or a white cell with a grayscale no less than 80% of the grayscale range within the checkerboard area is considered as a valid cell. The area around which the opposite-color checkerboard cells have a grayscale between 20% and 80% of the grayscale range within the checkerboard area is considered as ghosting. Calculate the splicing ghosting area SG_{fi} and the total proportion of splicing ghosting N_g as shown in Equations (2-37) and (2-38):

$$SG_{fi} = S_{fi} \times \frac{SG_i}{S_i} \quad (2\text{-}37)$$

$$N_g = \frac{\sum SG_i}{\sum S_i} \quad (2\text{-}38)$$

In which:

SG_{fi} - Actual area of splicing ghosting generated in any four adjacent rectangular-distributed cells;

SG_i - On-image area of splicing ghosting generated in any four adjacent rectangular-distributed cells;

S_{fi} - Area of cell in checkerboard pattern card;

S_i - On-image area of cell in checkerboard pattern card;

N_g - Total proportion of ghosting in spliced view.

d) Splicing Loss

Identify the splicing loss in the acquired planar spliced view. A black cell with a grayscale no greater than 20% of the grayscale range within the checkerboard area or a white cell with a grayscale no less than 80% of the grayscale range within the checkerboard area is considered as a valid cell. The area with a grayscale greater than 80% of the grayscale range within the checkerboard area and the area with a grayscale less than 20% of the grayscale range within the checkerboard area are considered as loss. Calculate the individual splitting loss SL_{fi} and the total proportion of splitting loss N_l separately, as shown in Equations (2-39) and (2-40):

$$SL_{fi} = S_{fi} \times \frac{SL_i}{S_i} \quad (2\text{-}39)$$

$$N_l = \frac{\sum SL_i}{\sum S_i} \quad (2\text{-}40)$$

In which:

SL_{fi} - Actual area corresponding to the splitting loss generated in any four adjacent rectangular-distributed cells;

SL_i - Area of the image lost in any four adjacent rectangular-distributed cells;

S_{fi} - Area of cell in checkerboard pattern card;

S_i - On-image area of cell in checkerboard pattern card;

N_l - Total proportion of splicing loss.

2.5.2.1.2 Head Up Display

2.5.2.1.2.1 Test Conditions

2.5.2.1.2.1.1 Test Site Conditions

The test shall be conducted in an optical darkroom without light leakage, and the indoor ambient illuminance shall not be greater than 0.01lx.

2.5.2.1.2.1.2 Lighting Conditions for Test

The ambient illuminance of the vehicle shall not exceed 50lx, and the illuminance at the location of the vehicle ambient lamp sensor shall not exceed 50lx.

2.5.2.1.2.1.3 Adjustment of Test Object

If there is a manual adjustment function, adjust the height of the head up display to the middle position.

2.5.2.1.2.2 Requirements for Equipment

2.5.2.1.2.2.1 General Requirements

The optical measuring instrument should be a first-class luminance meter specified in the national verification regulations, its effective distance for acquisition of virtual image shall not be less than 4m, and the mechanical device for reproducing the eye point position shall ensure that the positioning deviation in each direction is not more than 5mm.

2.5.2.1.2.2.2 Display Effect

The relative positions of the optical imaging point (V-point) of the test equipment and the H-point of 50% male drivers are defined in Table 2-3:

Table 2-3 Definition of Position of V-Point

Relative Position	X	Y	Z
V-point	68mm	-5mm	627mm

Unless otherwise specified, under the condition that the optical imaging point of the test equipment meets the requirements of the above table, the test equipment shall be so adjusted that the center of the virtual image of the tested vehicle coincides with and the imaging center of the test equipment.

Note: The coordinate information of H-point of 50% male drivers needs to be provided by the manufacturer. If the manufacturer does not provide the relevant coordinates, the relative coordinates of the H-point of 50% drivers need to be obtained through test and calculation by using the HPM dummy device.

2.5.2.1.2.3 Preparation of Tested Vehicle

a) Tyres: Check and adjust the pressure of each tyre to the pressure value specified by the vehicle manufacturer for half-loaded vehicle;

b) Vehicle load: The load shall include the curb weight of the tested vehicle and the weight of the driver and one front passenger (75kg each);

c) Adjustable suspension: If the vehicle is equipped with an adjustable suspension system, it

shall be properly set that the height of the vehicle is the standard height;

d) Doors and windows: All doors and windows of the vehicle are in a closed state, and the wiring harness of equipment is only allowed to be connected to external equipment through a separate rear window of the vehicle;

e) The headlamps of the vehicle shall be activated, and their light-emitting surfaces shall be covered with obstructions.

2.5.2.1.2.4 Test Items

2.5.2.1.2.4.1 Night Scenario

(1) Displayed Information Luminance

Acquire and record all luminance parameters of the virtual image of the tested vehicle, record the luminance of at least 5 sampling points in the normally-displayed information (vehicle speed - numeral, and navigation indicator - direction arrow) as L_{1w}-L_{nw}, and calculate the average luminance of the sampling points as L_w.

The calculation of displayed information luminance is as shown in Equation (2-41):

$$L_w = \frac{1}{n}\sum_{n} L_{iw} \tag{2-41}$$

(2) Displayed Information Size

a) Measure the actual distance a_{eye} from the reference position for acquisition of virtual image to the virtual image.

b) Acquire and record the virtual image;

c) Calculate the unidirectional height angle of the normally-displayed information (vehicle speed - numeral, and navigation indicator - direction arrow) in the virtual image, as shown in Equation (2-42):

$$\theta_i = 60sin^{-1}\left(\frac{d}{a_{eye}}\right) \tag{2-42}$$

In which: d is the unidirectional linear size of the normally-displayed information (vehicle speed - numeral, and navigation indicator - direction arrow) in the virtual image.

(3) Displayed Information Ghosting

Acquire and output the virtual image of the tested vehicle, visually locate the ghosted part of the normally-displayed information (vehicle speed - numeral, and navigation indicator - direction arrow) in the virtual image, and calculate the deviation angle between the ghosted part and the corresponding display content, as shown in Equation (2-43):

$$\theta_i = 60sin^{-1}\left(\frac{d}{a_{eye}}\right) \tag{2-43}$$

In which: d is the linear size of the ghosted part in the virtual image.

(4) Imaging Distance

Adjust the imaging distance of the optical measuring instrument until the virtual image of the tested vehicle is clearly visible, and record the imaging distance a_{eye} at this time

(5) Downward-View Angle

Let the optical measuring instrument initially be in a horizontal posture, and gradually adjust it into the downward-view (overlook) posture at the step of 0.1°, until the background rectangle of the virtual image of the tested vehicle is in the imaging center area of the testing instrument. Record the downward-view (overlook) angle at this time.

(6) Field of view

When the test equipment is in the test posture, observe the average horizontal size and average vertical size of the background rectangle of the virtual image of the tested vehicle, and record them as x and y respectively. As a result, HFOV=2arctan($x/2/a_{eye}$), and VFOV=2arctan($y/2/a_{eye}$).

(7) Display Contents

The test personnel shall carry out verification by consulting the user manual of the tested vehicle and actually operating the tested vehicle.

The operation of tested vehicle is mainly aimed at the virtual display screen and setting page of the HUD (head up display) system; on the setting page, the options such as speed display, speed limit display, AR display effect, visual prompts for ADAS functions, and vehicle driving status will be selected. Check the above display contents while driving.

2.5.2.2 Vision Anti-Interference

2.5.2.2.1 Anti-Glare

2.5.2.2.1.1 Test Conditions

2.5.2.2.1.1.1 Test Site Conditions

The test shall be conducted in an optical darkroom without light leakage, and the indoor ambient illuminance shall not be greater than 0.01lx.

2.5.2.2.1.1.2 Environmental Conditions for Test

With respect to the environmental temperature and humidity requirements, the temperature in the test chamber shall be 23℃±5℃, the humidity in the test chamber shall be no more than 70% RH, and the transmission performance of the beam and the accuracy of the instrument shall not be affected.

2.5.2.2.1.2 Requirements for Equipment

The optical measuring instrument shall be a first-class luminance meter specified in the national calibration regulations, and the mechanical device for reproducing the eye point position shall ensure that the positioning deviation in each direction is not more than 5mm.

2.5.2.2.1.3 Preparation of Tested Vehicle

2.5.2.2.1.3.1 Exterior and Interior Cleaning of Vehicle

Before the vehicle enters the test chamber, clean up the external surface of the vehicle, wipe it dry, and remove the foreign objects between the tyre treads, so as to prevent the dust and stains from contaminating the optical darkroom. In addition, clean up the on-board display screen and Ambient lamp, so as to ensure the accuracy of the test results.

2.5.2.2.1.3.2 Confirmation on Tyre Pressure and Battery State of Vehicle

Check and adjust the air pressure of each tyre to the pressure value specified by the vehicle manufacturer. The tyre pressure shall be left and right balanced, so as to ensure that the vehicle is parked as level as possible without tilting or other phenomena that may affect the lighting angle. Confirm that the battery is in a fully charged state, so as to ensure that the voltage will remain stable and will not affect the test during the test.

2.5.2.2.1.3.3 Counterweight of Vehicle

If the front seats are adjustable forwards and backwards, they shall be adjusted to the middle position of their adjustable travel. If the seat cannot be locked at the middle position, it shall be adjusted to the first lockable position behind the middle position. Place a 75kg dummy or equivalent counterweight on the driver's seat. If the test equipment needs to be placed on the driver's seat, the weight of the test equipment shall also be taken into account.

2.5.2.2.1.3.4 Conditioning of Vehicle

Before the test, the vehicle must be conditioned at an ambient temperature of 23℃±5℃ for at least 1h.

2.5.2.2.1.3.5 Tuning-On of On-Board Central Control Screen and Ambient lamp

Turn on the power supply switch of the vehicle, and maintain the on-board central control screen at the homepage screen. If the vehicle is equipped with an Ambient lamp, turn on the Ambient lamp and keep it in a stable emitting state.

2.5.2.2.1.3.6 Adjustment of Rearview Mirror

Adjust the angle of left/right rearview mirror, adjust the up, down, left and right rotation angles of left/right rearview mirror to the middle position, and mark the center point according to the center position of the rearview mirror provided by the manufacturer. If the manufacturer does not provide the center position, mark it at the geometric center of the rearview mirror after the measurement is completed through the size measuring equipment.

2.5.2.2.1.3.7 Determine of Eye Point Position

According to the relative position of the driver's eye point coordinates provided by the manufacturer, move the optical center of the optical measuring instrument to the driver's eye point. If the manufacturer does not provide the relevant coordinates, carry out the test based on the HPM

dummy device, and carry out calculation, so as to obtain the relative coordinates of the driver's eye point.

2.5.2.2.1.4 Test Items

The central control screen anti-glare ability and Ambient lamp anti-glare ability shall be tested according to the following test scenarios and test methods. Complete the test in the following six scenarios (see Table 2-4).

Table 2-4 Anti-Glare Test Scenarios

<table>
<tr><th>State of Central Control Screen</th><th>State of Ambient lamp</th><th>Remarks</th></tr>
<tr><td>Central control screen -homepage interface</td><td rowspan="3">Ambient lamp turned off</td><td rowspan="6">1. If the central control screen and Ambient lamp have environmental adaptive luminance adjustment function, they shall be turned on; if the central control screen or Ambient lamp does not have the environmental adaptive luminance adjustment function, it shall be adjusted to the brightest state for testing.
2. If the Ambient lamp has the dazzling function, it shall be turned off;
3. If the vehicle is equipped with Ambient lamp color and central control screen theme adjustment mode, the default color or theme shall be used.</td></tr>
<tr><td>Central control screen -navigation interface</td></tr>
<tr><td>Central control screen -music interface</td></tr>
<tr><td>Central control screen -homepage interface</td><td rowspan="3">Keep ambient lamp on</td></tr>
<tr><td>Central control screen -navigation interface</td></tr>
<tr><td>Central control screen -music interface</td></tr>
</table>

(1) Forward Vision Area Luminance

Determine the front of the driver's eye point as the direction of vision, namely the spatial solid angle enclosed by four spatial planes which are 17° leftwards/rightwards, 7° upwards and 5° downwards respectively based on the determined driver's eye point. The area within such solid angle is the forward vision area. Adjust the axis direction of the optical lens of the optical measuring instrument to the front direction of the vehicle, and complete the luminance acquisition of the forward vision area. The test area is the projection of the luminous area of the above-defined spatial solid angle.

(2) Left Rearview Mirror Area Luminance

Based on the determined driver's eye point position and the center of the left rearview mirror surface, determine the line-of-sight direction in left rearview mirror vision. Adjust the horizontal angle and pitch angle of the optical measuring instrument until the observation direction of the optical measuring instrument coincides with the above line-of-sight direction, and then complete the luminance acquisition of left rearview mirror vision area. The test area is the reflective luminous area within the outer contour of left rearview mirror.

(3) Right Rearview Mirror Area Luminance

Based on the determined driver's eye point position and the center of the right rearview mirror surface, determine the line-of-sight direction in right rearview mirror vision. Adjust the horizontal angle and pitch angle of the optical measuring instrument until the observation direction of the optical

measuring instrument coincides with the above line-of-sight direction, and then complete the luminance acquisition of right rearview mirror vision area. The test area is the reflective luminous area within the outer contour of right rearview mirror.

(4) Central Control Screen Vision Area Luminance

The test area is divided into two areas, namely Area A and Area B. The forward vision area above the horizontal plane passing the lower edge of the central control screen is defined as Area A; where the test shall take the geometric center of central control screen as the line-of-sight direction and the test area shall include the entire central control screen. The forward vision area below the horizontal plane passing the lower edge of the central control screen is defined as Area B, where the test area shall include all ambient lamps existing within Area B.

(5) Artifact

When conducting the test on the forward vision area, left rearview mirror vision area or right rearview mirror vision area, check whether there are the reflections generated by ambient lamps or on-board display screen within the above vision ranges and within the front and side windshield areas.

2.5.3 Smart Service

2.5.3.1 Test Conditions

As for network conditions, the uplink bandwidth shall be no less than 200kbit/s, the downlink bandwidth shall be no less than 100kbit/s, and the stable connection state shall be maintained.

2.5.3.2 Requirements for Equipment

None

2.5.3.3 Preparation of Tested Vehicle

The tested vehicle shall be a new vehicle, with the travelled distance of no more than 5,000km. After the vehicle is started, all functions of on-board system shall work normally, including but not limited to: the GPS, radio, Bluetooth, WiFi, and antenna shall work normally; the buttons on steering wheel shall work normally; the radar shall work normally; and the touch control of central control screen shall be normal.

2.5.3.4 Test Items

2.5.3.4.1 Welcoming Scenario

2.5.3.4.1.1 Vehicle Body Accessory Linkage

2.5.3.4.1.1.1 Automatic Unfolding of Rearview Mirrors

Carry the vehicle key or unlocking card, unlock the vehicle, enter the cockpit and start the vehicle, make it idle for 1min, turn off the engine (or power off the vehicle), and lock the vehicle. Record whether the external rearview mirrors of the vehicle can be unfolded automatically during this process.

2.5.3.4.1.2 On-Board Computer IP Steward

2.5.3.4.1.2.1 Physical or Virtual On-Board Computer IP Steward Image

Wake up the on-board computer system through voice command or button wakeup, and check whether the cockpit has a physical or virtual on-board computer IP steward image.

2.5.3.4.1.2.2 Personalized Sound

Wake up the on-board computer system through voice command or button wakeup, check whether the in-cockpit voice interaction system has personalized sound settings, and check the types supported.

2.5.3.4.2 Driving Scenario

2.5.3.4.2.1 Intelligent Seat

Complete the following function check by consulting the user manual of vehicle and conducting the practical verification.

2.5.3.4.2.1.1 Temperature Adjustment - Seat Ventilation

Check and record whether the driver's seat has seat ventilation function.

2.5.3.4.2.1.2 Temperature Adjustment - Seat Heating

Check and record whether the driver's seat has the seat heating function.

2.5.3.4.2.1.3 Position Adjustment - Position Memory

Unlock and start the vehicle, log into the on-board-computer account, and check whether the driver's seat has the position memory function.

2.5.3.4.2.1.4 Position Adjustment - Distinctive mode

Unlock and start the vehicle, log into the on-board-computer account, and check whether the front or rear seats have the multi-directional adjustment function (such as backrest, seat cushion, and leg rest) which can meet the needs of large-angle lying posture.

2.5.3.4.2.1.5 Seat Massage

Check and record whether the driver's seat has the seat massage function.

2.5.3.4.2.2 Intelligent A/C

2.5.3.4.2.2.1 Automatic Ventilation

Consult the user manual of vehicle to see whether the on-board A/C has the function to monitor the interior air PM2.5 or the interior temperature and humidity and be turned on automatically for adjusting the interior environment of the vehicle.

2.5.3.4.2.3 Software Ecology in On-Board Computer

2.5.3.4.2.3.1 Types of software applications

Consult the user manual of vehicle to see whether there are navigation, music, social, video, shopping, gaming, smart home, karaoke, and other applications on its central control screen, or whether

the above applications can be downloaded through the application store, and carry out verification through actual operation.

2.5.3.4.2.4 Intelligent Ambient lamp

2.5.3.4.2.4.1 Adjustment of Ambient lamp

Consult the user manual of vehicle to see whether the Ambient lamp effect (color type or luminance) can be adjusted, and whether the Ambient lamp has the function to link with music playback or to adapt to ambient lamp, and carry out verification through actual operation.

2.5.3.4.3 Seeing Off Scenario

2.5.3.4.3.1 Intelligent locking after leaving

2.5.3.4.3.1.1 Automatic locking after leaving

Consult the user manual of vehicle to see whether the vehicle has the function to get locked automatically when the driver leaves the vehicle, and carry out verification through actual operation.

C-ICAP

Appendix 1: Description of Test Corpus for Voice Interaction

1. Test Corpus for Voice Wakeup – Wakeup free

Function	No.	Corpus Text	Function Description
Navigation	1	End the navigation	—
Music	1	Previous song	—
System setting	1	Decrease the sound volume	—
Vehicle control	1	Turn on the air	—
	2	Increase the temperature	—
Remarks: If the tested voice interaction system does not support the above corpus texts, 5 other corpus texts supported by the tested voice interaction system may be selected.			

2. Test Corpus for Driver's Seat – Without Noise/With Noise - Basic Corpus Interaction

2.1 Test Corpus for Standard Mandarin

Function	No.	Corpus Text	Function Description
Navigation	1	Turn on the navigation	—
	2	Exit the navigation	—
	3	End the navigation	—
	4	Stop the navigation	—
	5	Navigate to company	—
	6	I am going home	—
	7	Navigate to XXX	XXX is the name or address of a certain location
	8	I want to go to XXX	XXX is the name or address of a certain location
	9	Plan a route to XXX	XXX is the name or address of a certain location
	10	The fastest route to XXX	XXX is the name or address of a certain location
	11	Go to XXX	XXX is the name or address of a certain location
	12	To XXX	XXX is the name or address of a certain location
	13	Look for XXX	XXX is the name or address of a certain location
	14	Nearby charging stations/gas stations	Electric vehicle: nearby charging stations Fuel vehicle or hybrid vehicle: nearby gas stations
	15	What is the delicious food nearby	—
	16	Nearby parking lots	—
	17	Where can I charge/refuel my vehicle	Electric vehicle: where can I charge may vehicle Fuel vehicle or hybrid vehicle: where can I refuel may vehicle
	18	First	—
	19	Start the navigation	—
	20	Change the route	—
	21	Turn on the real-time traffic	—

CIAP

Function	No.	Corpus Text	Function Description
Music	1	Turn up the music	—
	2	Listen to music	—
	3	Play a song	—
	4	Stop the music	—
	5	Exit the music	—
	6	Pause the playback	—
	7	Continue playing	—
	8	Switch to Bluetooth music	—
	9	Previous song	—
	10	Next song	—
	11	I want to listen to the next song	—
	12	I want to listen to the previous song	—
	13	Change the song	—
	14	Switch to USB music	—
Radio	1	Turn on the radio	—
	2	Listen to the radio	—
	3	I want to listen to the radio	—
	4	Turn off the radio	—
	5	Change the radio station	—
	6	Next channel	—
	7	Previous channel	—
	8	Change the channel	—
Telephone	1	Make a phone call to XX	XXX is the name or telephone number of contact
	2	Call XXX	XXX is the name or telephone number of contact
	3	Contact XXX	XXX is the name or telephone number of contact
	4	Dial XXX	XXX is the name or telephone number of contact
	5	Ring XXX up	XXX is the name or telephone number of contact
	6	Make a call to XXX	XXX is the name or telephone number of contact
	7	T want to call XXX	XXX is the name or telephone number of contact
	8	Put through to XXX	XXX is the name or telephone number of contact
	9	Check the call log	—
System setting	1	Mute	—
	2	Unmute	—
	3	Turn on the Bluetooth	—
	4	Open the setting	—
Vehicle control	1	Open the windows	—
	2	Close the windows	—
	3	Increase the A/C	—
	4	Decrease the A/C	—

CICAP

2.2 Test Corpus for Dialect

Function	No.	Corpus Text	Function Description
Navigation	1	Turn on the	—
	2	Exit the navigation	—
	3	Navigate to company	—
Music	1	Turn up the music	—
	2	Next song	—
Radio	1	Turn on the radio	—
Telephone	1	Call XXX	XXX is the name or telephone number of contact
System setting	1	Mute	—
	2	Unmute	—
	3	Turn on the	—

2.3 Test Corpus for Regional Accent

Function	No.	Corpus Text	Function Description
Navigation	1	Turn on the navigation	—
	2	Exit the navigation	—
	3	Navigate to company	—
Music	1	Turn up the music	—
	2	Next song	—
Radio	1	Turn on the radio	—
Telephone	1	Call XXX	XXX is the name or telephone number of contact
System setting	1	Mute	—
	2	Unmute	—
	3	Turn on the Bluetooth	—

2.4 Test Corpus for Interaction Response Delay

Function	No.	Corpus Text	Function Description
Navigation	1	Turn on the navigation	—
	2	Exit the navigation	—
	3	Navigate to company	—
	4	I am going home	—
Telephone	1	Make a phone call to XXX	XXX is the name or telephone number of contact person
	2	Ring XXX up	XXX is the name or telephone number of contact
	3	Contact XXX	XXX is the name or telephone number of contact
	4	Call XXX	XXX is the name or telephone number of contact
System setting	1	Mute	—
	2	Turn on the Bluetooth	—

3. Test Corpus for Driver’S Seat - Without Noise -Advanced Corpus Interaction

CICAP

3.1 Test Corpus for Multiple Intentions in One Sentence

No.	Corpus Text	Function Description
1	Turn off the air conditioner and turn up the music	—
2	Turn off the air conditioner and turn on the navigation	—
3	Turn up the music and navigate home	—
4	Turn off the music and call 10086	—
5	Turn on the air conditioner and navigate home	—

3.2 Test Corpus for Multi-Round Interaction

No.	Corpus Text	Function Description
1	Navigate to Tiananmen Square First Change the destination Tianjin Railway Station	—
2	Nearby hotels First Gas stations/parking lots on the way First	Electric vehicle: charging stations on the way Fuel vehicle or hybrid vehicle: gas stations on the way
3	Set the address of home Tianjin Railway Station	—
4	Navigate to Tianjin Railway Station First How far is the destination still Hotels near the destination	—
5	Turn up the music Play a rock song Next song Pause playback	—

3.3 Test Corpus for Semantic Comprehension

No.	Corpus Text	Function Description
1	It's too noisy	—
2	It's too hot	—
3	Play a rock song	—
4	This song doesn't sound good	—
5	Hotels within 3 kilometers	—

3.4 Test Corpus for Visible to Say

CICAP

3.4.1 Contact List for Visible to Say

No.	Corpus Text	Function Description
1	Boss	15800000000
2	Dad	15800000000
3	Mom	15800000000
4	Wife/husband	15800000000/15800000000
5	Son	15800000000

3.4.2 Test Corpus for Visible to Say

No.	Corpus Text	Function Description
1	Boss	—
2	Dad	—
3	Mom	—
4	Wife/husband	Male: wife/female: husband
5	Son	—

4. Test Corpus for Driver's Seat - Internet Disconnected - Basic Corpus Interaction

Function Category	No.	Corpus Text	Function Description
System setting	1	Mute	—
	2	Turn on the Bluetooth	—
	3	Opening the setting	—
Vehicle control	1	Turn on the air conditioner	—
	2	Turn off the air conditioner	—

5. Test Corpus for Passenger's Seat - Without Noise - Basic Corpus Interaction

5.1 Test Corpus for Front Passenger'S Seat

Function Category	No.	Corpus Text	Function Description
Window control	1	Open the windows	—
	2	Close the windows	—
A/C control	1	Increase the A/C temperature	—
	2	Decrease the A/C temperature	—

5.2 Test Corpus for Rear Seat

Function Category	No.	Corpus Text	Function Description
Window control	1	Open the windows	—
	2	Close the windows	—

CICAP